MERITOR
an ArvinMeritor brand

Revised 2/2006

Out of Production
Single Reduction Axles

Catalog PB-9424

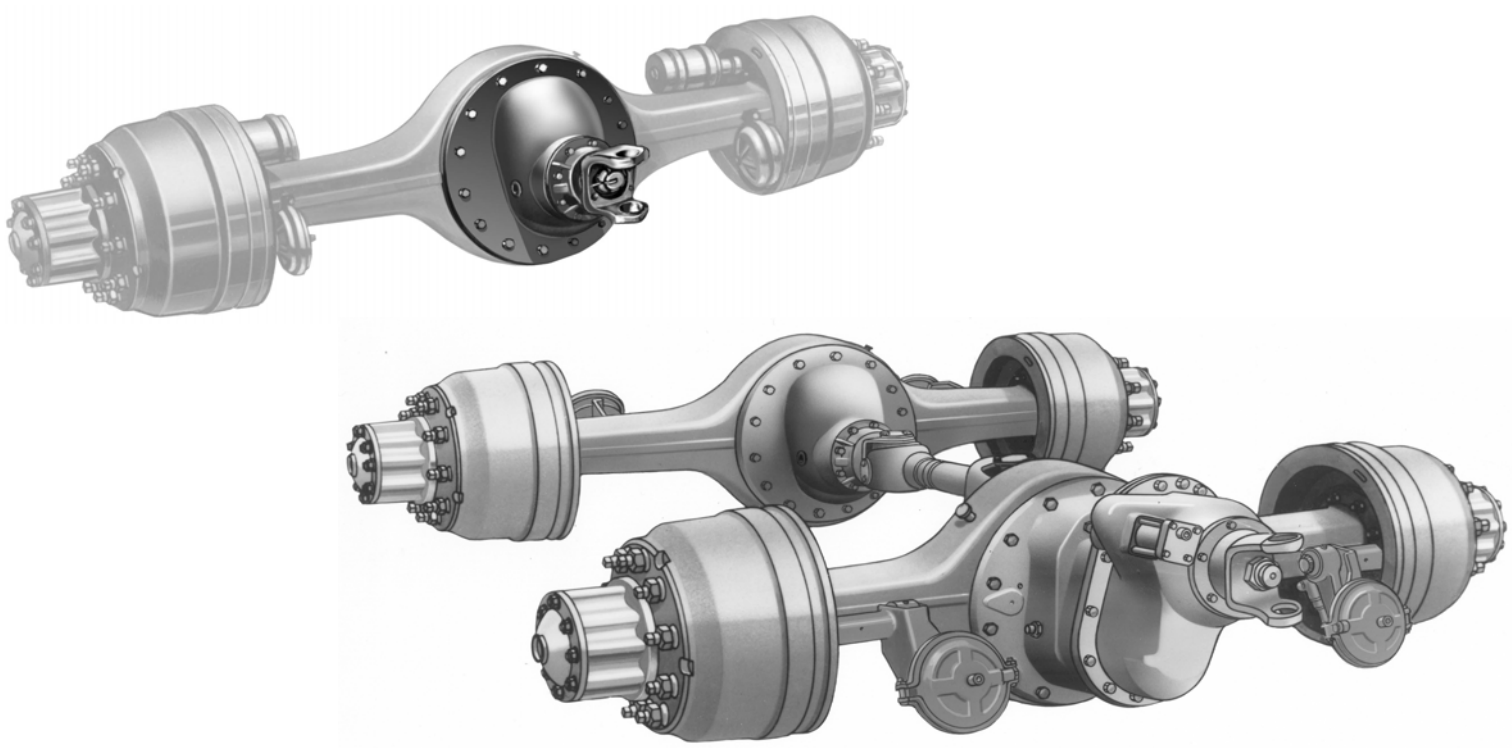

Strength • Power • Speed • Agility

MERITOR PARTS. RIGHT FROM THE START.

HOW TO USE THIS CATALOG

- This catalog contains the most popular carriers for Single Reduction, Out of Production Axles. Major assembly differences such as traction equalizers, NoSpins, different differential nest assemblies, etc., are also cataloged. These major assembly differences in a carrier are indicated by the different assembly level numbers in front of the base carrier number. The axle carrier chart at the beginning of each model lists all the variations covered in this catalog.

  NOTE: The carriers listed in this catalog do **not** include yokes. A yoke is a major assembly difference. Therefore, a carrier sold with a yoke has a different assembly level number than the same carrier without the yoke.

- **SECTION 1 - The charts for carriers and housing components include the following information:**
  - An exploded view of each assembly, keyed to the parts list.
  - A description of each part.
  - Parts that are sold as assemblies that include other parts.
  - The carriers or axle models the part is used on.
  - The quantity of the part used on the carrier or axle.
  - The part number for each part.

- **SECTION 2 - Housing Components and Wheel End Parts:** These charts cover the miscellaneous housing components and wheel end parts and are sequenced by model number.

- **SECTION 3 - Axle Shafts:** The shafts listed in this section are sequenced according to model designation.

- **SECTION 4 - Drive Gear and Pinion Assemblies:** This section lists all gear sets and ratios by model designation.

- **SECTION 5 - Yokes and Flanges:** These charts cover full round bearing yokes, wing bearing yokes, Easy Service yokes and flanges used on each axle model. The yokes and flanges are listed by dimension by axle model.

- **SECTION 6 - Service Kits:** The kits are sequenced according to the kit number. The contents of each kit, the model designation and a brief description are listed.

- **SECTION 7 - NoSpin Part Number Reference Chart:** This chart lists the NoSpin part number for each corresponding axle model number.

- **SECTION 8 - Numerical Parts Index:** This section lists every part number and page(s) on which the part appears.

LOCATION AND IDENTIFICATION OF MERITOR AXLE SPECIFICATIONS

To correctly identify your axle model specification, there is an I.D. tag riveted on the rear of the axle housing. When ordering replacement parts be sure to specify the model number and the ratio number stamped on the I.D. tag.

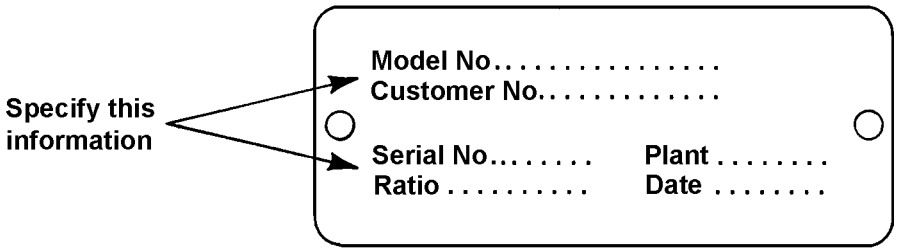

EXAMPLE OF THE I.D. TAG

Out of Production Single Reduction Axles

Contents

SECTION 1

Carrier Explodes & Parts Lists **Page**

C Series..... 1-2
D & F Series..... 1-5
H-172/173, L-172/173 Series..... 1-9
P-174 Series 1-11
R/S-170 Series..... 1-13
SL/SQHD Family..... 1-17
SL/SQ-100 Family..... 1-26
SSHD Family..... 1-40

SECTION 2

Axle Housing Assemlies **Page**

C-100 Series..... 2-2
C-102/103 Series..... 2-3
D Series..... 2-4
F Series..... 2-5
H-172/173 Series..... 2-6
L-172/173 Series..... 2-7
P-174 Series 2-8
R/S-170 Series..... 2-9
SL/SQHD Family..... 2-10
SL/SQ-100 Family..... 2-11
SSHD Family..... 2-12

SECTION 3

Axle Shaft Assemblies **Page**

C Series..... 3-2
D Series..... 3-3
F Series..... 3-4
H-172 Series..... 3-6
H-173, L-172/173 Series..... 3-7
P-174 Series 3-8
R/S-170 Series..... 3-9
SL/SQHD Family..... 3-10
SL/SQ-100 Family..... 3-11
SSHD Family..... 3-12

SECTION 4

Drive Gear & Pinion Assemblies **Page**

C Series..... 4-2
D Series..... 4-2
F Series..... 4-3
H-172 Series..... 4-3
H-173 Series..... 4-3
L-172 Series..... 4-4
L-173 Series..... 4-4
P-174 Series 4-4
R/S-170 Series..... 4-5
SL/SQHD Family..... 4-5
SL/SQ-100 Family..... 4-7
SSHD Family..... 4-8

SECTION 5

Yoke Assemblies **Page**

C Series..... 5-2
D & F Series..... 5-2
H-172/173, L-172/173 Series..... 5-3
P-174 Series 5-3
R/S-170 Series..... 5-3
SL/SQHD Family..... 5-4
SL/SQ-100 Family..... 5-5
SSHD Family..... 5-6

SECTION 6

Page

Service Kits..... 6-1

SECTION 7

Page

NoSpin Part Number Reference Chart..... 7-1

SECTION 8

Page

Numerical Parts Index..... 8-1

TANDEM AXLE MODEL DESIGNATIONS (EXCEPT SQ-100 FAMILY)

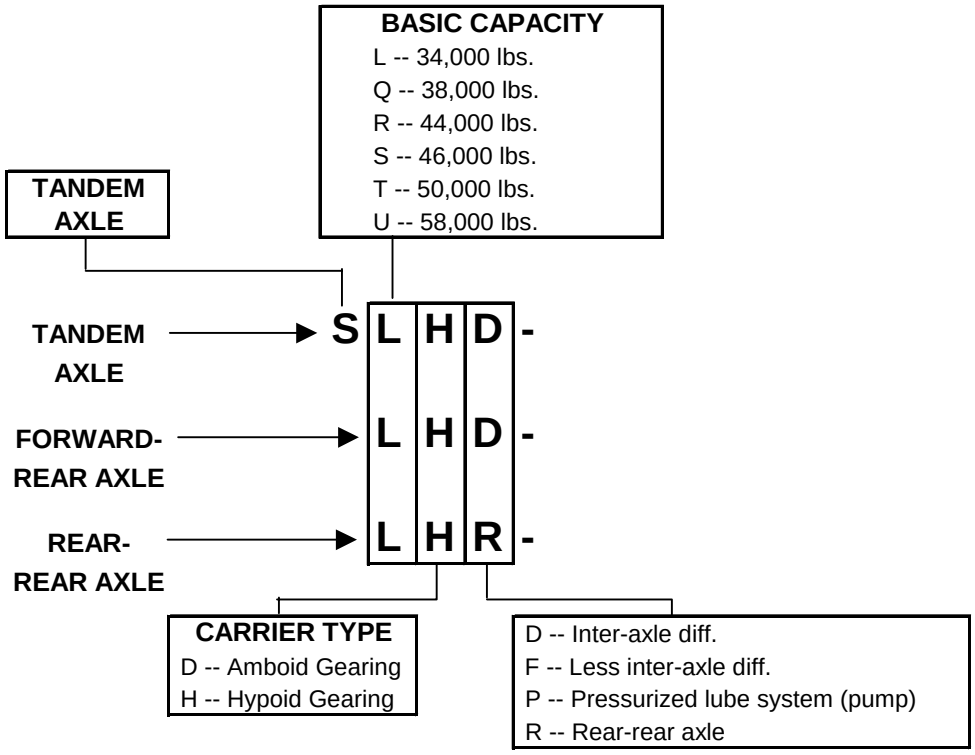

TANDEM AXLE MODEL DESIGNATIONS SQ-100 FAMILY

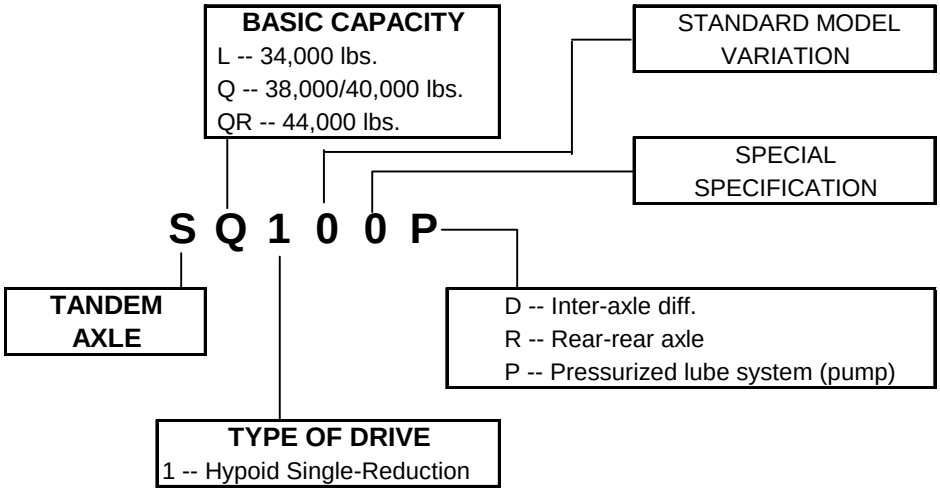

SINGLE AXLE MODEL DESIGNATIONS

INDICATES AXLE CAPACITY OR SIZE:

C - 11,000 lbs.	RL - 20,000 lbs.
D - 13,000 lbs.	R - 23,000 lbs.
F - 15,000 lbs.	S - 26,000 lbs
H - 17,500 lbs.	U - 29-30,000 lbs.
L - 18,500 lbs	W - 36-38,000 lbs.
P - 20,000 lbs.	
Q - 22,000 lbs.	

TYPE OF DRIVE UNIT

1. Single Reduction
2. Double Reduction (Single Speed)
3. Double Reduction (Two-Speed)
4. Amboid Single Reduction
5. Planetary Double Reduction
6. Planetary Two-Speed

Number variation - indicate major design variation such as special spindle or axle shaft spline.

R - 1 7 0 -

1. Bus type wheel bearing (oversize inner wheel bearing).
2. Different carrier or housing (mix of standard parts). Same rating.
3. Open (was for axle with top mounted carrier).
4. Reserved for complete carrier redesign.
5. Was used for single reduction split type axle; also for 2 to 1 speed double reduction axle, but now it is used to indicate the single rear axle of a tandem (R-155 rear of SSHD).
6. Used to indicate a different carrier assembly than standard like No. 2, but after a redesign of No. 4.
7. Indicates a bigger ring gear version such as H-170 and R-170 axles.
8. Indicates an even bigger ring gear. Example: R-180 with 19-5/8" diameter gear.

SECTION 1

INDEX

Carrier Explodes & Parts Lists **Page**

C Series..... 1-2
D & F Series..... 1-5
H-172/173, L-172/173 Series..... 1-9
P-174 Series 1-11
R/S-170 Series..... 1-13
SL/SQHD Family..... 1-17
SL/SQ-100 Family..... 1-26
SSHD Family..... 1-40

C SERIES

C100, C102, C103
3200-P-484

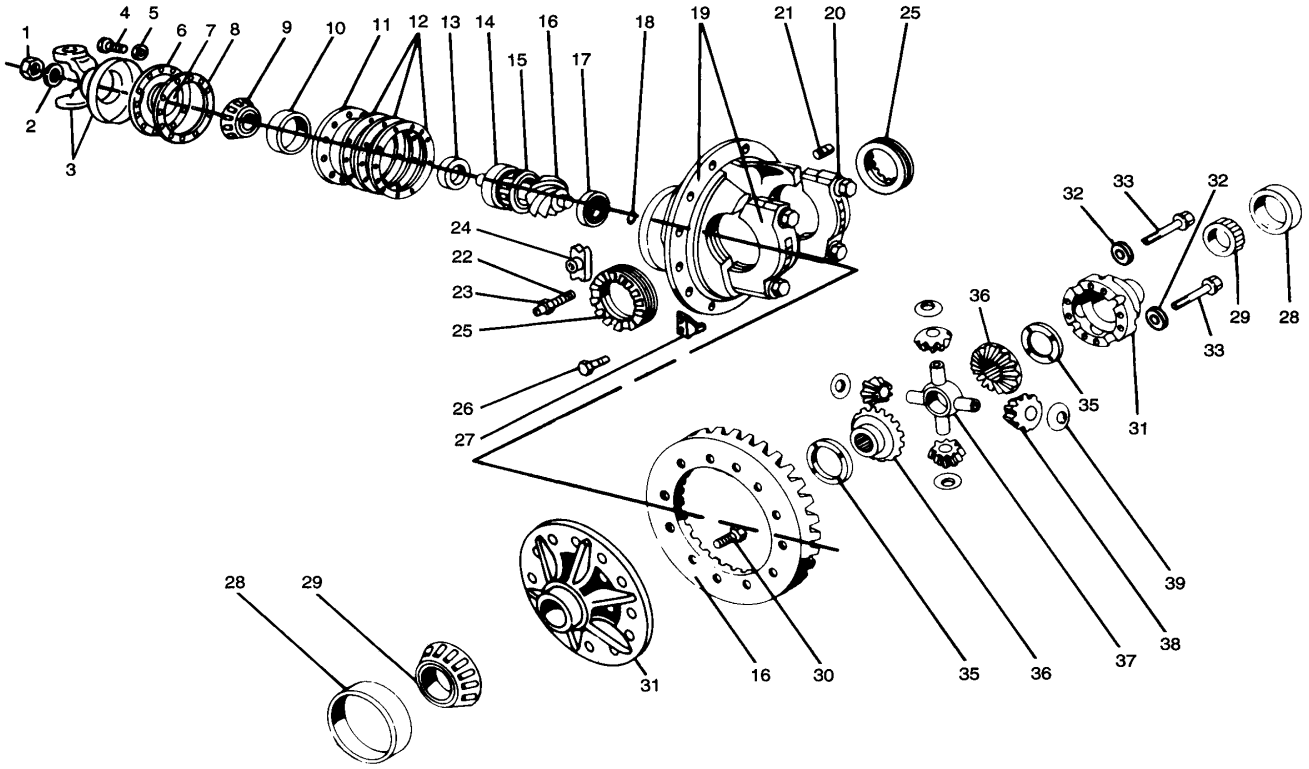

AVAILABLE DIFFERENTIAL CARRIER ASSEMBLIES, LESS YOKE

DIFFERENTIAL CARRIER ASSY. PART NO.	DIFFERENTIAL TYPE	AXLE SPLINE	RATIOS	
A62-3200-P-484	Standard	1.66"-32	FAST:	3.70, 4.10, 4.11, 4.33, 4.56
A76-3200-P-484	Hi-Traction	1.625"-16	STANDARD:	5.13, 5.29, 5.38, 5.83, 5.86, 6.14, 6.20, 6.80, 7.20

C100, C102, C103
3200-P-484

ITEM	DESCRIPTION		QTY.	PART NUMBER	REMARKS
1	Nut-drive pinion		1	**1227-C-939**	
2	Washer-drive pinion nut		1	**1229-E-1331**	
3	Input yoke assembly		1	**See SECTION 5**	
4	Capscrew-pinion cage		8	**S-269-2**	1.12" x 3/8"
				S-2610-2	1.25" x 3/8"
				S-2616-2	2.00" x 3/8"
5	Washer-pinion cage		8	**1229-B-1666**	
			8	**WA-16**	
6	Cover-pinion cage		1	**A-3266-V-126**	
7	Oil seal		1	**A-1205-G-683**	C100
				A-1205-S-1527	C102/C103
8	Gasket-pinion cage		1	**2208-P-380**	
9	Cone-bearing outer		1	**44143**	
10	Cup-bearing outer		1	**44348**	
11	Cage-pinion bearing		1	**A-3226-P-94**	C100
				A-3226-L-818 (2)	C102/C103
12	Shim/spacer,	.172	2	**2203-F-1566**	Available as KIT 519, see SECTION 6
	bearing cage	.173	2	**2203-G-1567**	
		.174	2	**2203-H-1568**	
		.175	2	**2203-J-1570**	
		.176	2	**2203-K-1571**	
		.177	2	**2203-L-1572**	
		.183	2	**2203-M-1573**	
		.189	2	**2203-N-1574**	
		.195	2	**2203-P-1576**	
		.201	2	**2203-Q-1577**	
13	Shim, pinion bearing	.003	As reqd.	**2203-T-1502**	
		.005		**2203-U-1503**	
		.010		**2203-A-1509**	Use KIT 519
14	Cup-bearing inner		1	**M-903310**	
15	Cone-bearing inner		1	**M-903345**	
16	Drive gear & pinion assy.		1	**See SECTION 4**	
17	Bearing-pinion spigot		1	**1228-C-55**	
18	Snap ring-pinion spigot brg.			**1229-J-1882**	
19 (1), 20	Carrier & cap assy.		1	**A2-3200-P-484**	
20	Bolt-carrier & cap assy.		4	**S-2934-2**	
21	Plug		1	**P-212**	Standard
				1250-E-473	Magnetic
22	Screw-thrust		1	**15-X-1026**	
23	Nut-thrust screw		1	**13-X-13**	
24	Block-thrust screw		1	**2297-Q-563 (6)**	
25	Ring-adjusting		2	**2214-E-57**	
26	Capscrew-adj. ring lock		2	**S-256-2**	
27	Cotter key		2	**1199-R-2176**	
	Lock-adj. ring		2	**1820-R-44 (2)**	
28	Cup-bearing-L.H. & R.H.		2	**394A**	
29	Cone-bearing-L.H. & R.H.		2	**395**	

(1) Not serviced separately
(2) No longer available
(6) Contact Specifications for replacement information (888-725-9355)

C SERIES

C100, C102, C103
3200-P-484 (Continued)

ITEM	DESCRIPTION	QTY.	PART NUMBER	REMARKS
30	Rivet-diff. case 1.50"x.438"	12	**RV-7712**	For service, can use KIT 946 (bolt on)
	to gear 1.50"x.500"		**RV-7812**	For service, can use KIT 947 (bolt on)
31, 32, 33	Diff. case assy.	1	**A46-3235-D-394**	Std. ratios, .45 gear attachment hdwe.
			A17-3235-K-661	Fast ratios, .45 gear attachment hdwe.
			A-3235-Y-1481	Std. ratios, .50 gear attachment hdwe.
			A-3235-C-1589	Fast ratios, .50 gear attachment hdwe.
31, 32, 33, 34, 35, 36, 37, 38, 39	Diff. case & nest assy.	1	**A3-3235-D-394**	Std., 1.62"-16 spline
			A21-3235-D-394 (2)	HiTraction, 1.62"-16 spline
			A-3235-K-661 (2)	HiTraction, 1.62"-16 spline
			A1-3235-Y-1481	Std., 1.62"-16 spline (298 spider)
			A4-3235-Y-1481	Std., 1.66"-32 spline
			A6-3235-Y-1481	Std., 1.62"-16 spline (107 spider)
			A4-3235-C-1589	Std., 1.66"-32 spline
			A7-3235-C-1589	HiTraction, 1.62"-16 spline
32	Washer-diff. case bolt	8	**1229-E-1513**	
33	Bolt-diff. case	8	**S-2721-2**	2.62" x 7/16"
			S-2722A-1	2.75" x 7/16"
34	Thread locking liquid/diff. case bolt	1	**2297-C-7049**	.34 oz. tube. See NOTE below.
35	Washer-side gear thrust	2	**1229-N-1314**	
36	Gear-side	2	**2234-Y-233**	Standard, 1.62"-16 spline
			2234-U-489 (2)	HiTraction, 1.62"-16 spline
			2234-R-954	Standard, 1.66"-32 spline
37	Spider-diff.	1	**3278-C-107**	
			3278-L-298	
38	Pinion-diff.	4	**2233-J-140**	Standard
			2233-Y-467 (2)	HiTraction
39	Washer-pinion thrust	4	**1229-M-1313**	

(2) No longer available

NOTE: THREAD LOCKING LIQUID/DIFFERENTIAL CASE HALVES

When assembling differential case halves in Meritor axles, a thread locking adhesive should be used.
The recommended procedure is as follows:

1. Wipe excess oil and residue from the threaded holes in the case. The holes should be relatively oil free.
2. If new bolts are being used, a yellow coating of Dri-Loc should appear on the threads. Assemble the case with these coated bolts to the required torque.
3. If the original bolts are reused or regular bolts without Dri-Loc are used, Meritor part no. 2297-C-7049 should be used as a thread locking adhesive. Apply the adhesive to the differential case holes only. Thread the bolts and tighten to the required torque.

IMPORTANT: Do not apply Meritor part no. 2297-C-7049 to Dri-Loc coated bolts.
Refer to Meritor Maintenance Manual 1 for complete procedure.

D140, F106, F140, F145, F146, F149
3200-A-1093, 3200-R-1110, 3200-S-1111 & 3200-U-1113

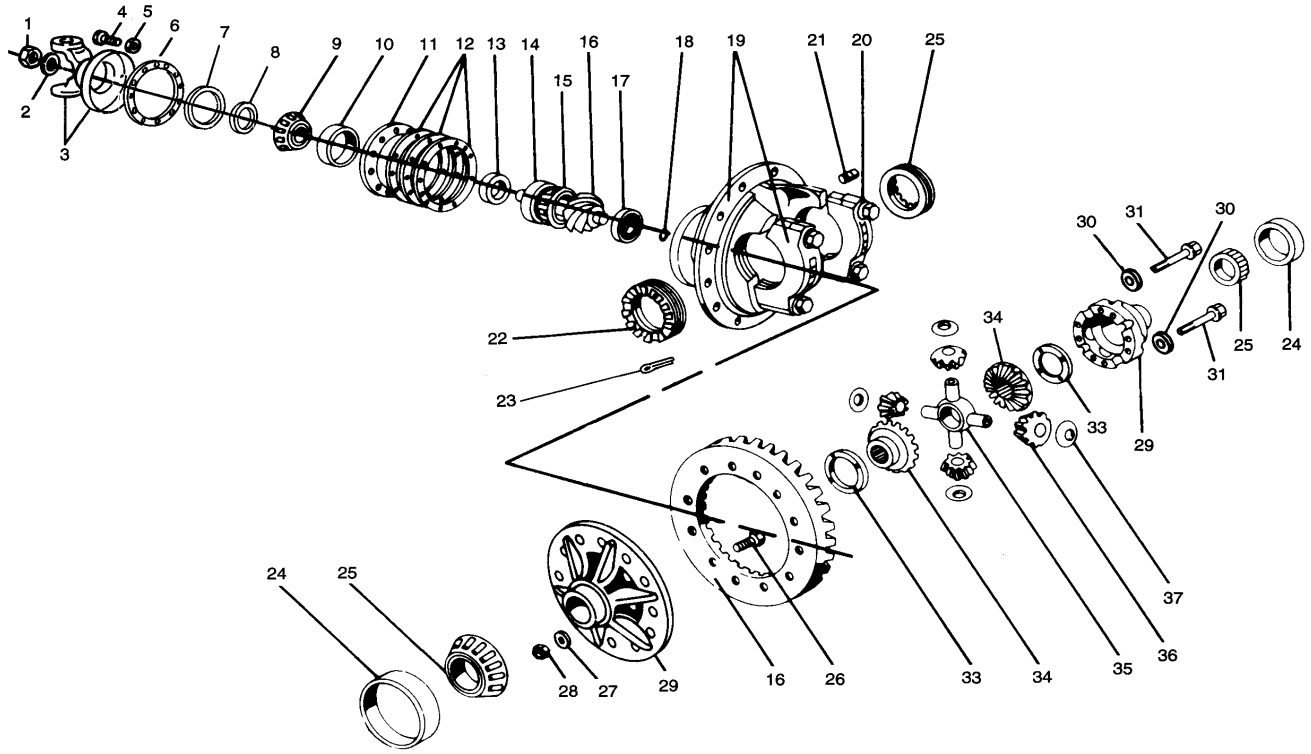

MODEL	DIFFERENTIAL CARRIER ASSY. PART NO.	DIFF. TYPE/ DESCRIPTION	AXLE SPLINE	RATIOS
D	G97-3200-A-1093	HiTrac, riveted gear	19 spline	FAST: 4.33 STANDARD: 4.88, 5.29, 5.83, 6.20, 6.80, 7.20, 7.80
	H33-3200-A-1093	HiTrac, bolt on gear		
	G79-3200-A-1093	NoSpin		
	G96-3200-A-1093	NoSpin, heavy duty spigot bearing.		
	G86-3200-R-1110	Std., 4.33 ratio only		
	G12-3200-S-1111	HiTrac, bolt on gear		
	G80-3200-S-1111	NoSpin, bolt on gear, 4.33 only		
	G39-3200-S-1111	NoSpin, bolt on gear		
	G71-3200-S-1111	Std., bolt on gear		
	H20-3200-R-1110	Std.	34 spline	
	H42-3200-R-1110	NoSpin		

D & F SERIES

D140, F106, F140, F145, F146, F149
3200-A-1093, 3200-R-1110, 3200-S-1111 & 3200-U-1113 (Continued)

MODEL	DIFFERENTIAL CARRIER ASSY. PART NO.	DIFF. TYPE/ DESCRIPTION	AXLE SPLINE	RATIOS
F	**G76-3200-A-1093**	HiTrac	19 spline	FAST: 4.63, 4.88 STANDARD: 5.29, 5.83, 6.14, 6.20, 6.80, 6.83, 7.17, 7.20, 7.80
	G50-3200-A-1093	NoSpin, bolt on gear		
	G80-3200-A-1093	NoSpin, riveted gear		
	F23-3200-A-1093	Std., 4.63 ratio only		
	G93-3200-A-1093	Std., riveted gear		
	H35-3200-A-1093	Std., bolt on gear		
	G66-3200-R-1110	HiTrac		
	G31-3200-R-1110	NoSpin		
	H30-3200-R-1110	NoSpin, triple lip seal		
	G6-3200-S-1111	HiTrac, bolt on gear, fast ratios		
	F26-3200-S-1111	HiTrac, riveted gear		
	F60-3200-S-1111	HiTrac, riveted gear, integral cage & cover		
	G64-3200-S-1111	HiTrac, bolt on gear		
	G40-3200-S-1111	NoSpin, bolt on gear		
	F34-3200-U-1113	HiTrac, bolt on gear		
	F48-3200-U-1113	NoSpin, bolt on gear		
	H41-3200-A-1093	NoSpin, triple lip seal	34 spline	
	H84-3200-R-1110	HiTrac		
	H1-3200-R-1110	NoSpin, triple lip seal		
	H73-3200-R-1110	NoSpin, triple lip seal, magnetic plug		
	H-3200-R-1110	Std., riveted gear, triple lip seal		
	H55-3200-R-1110	Std., bolt on gear, triple lip seal		
	H72-3200-R-1110	Std., riveted gear, triple lip seal, magnetic plug		

ITEM	DESCRIPTION	QTY.	PART NUMBER	REMARKS
1	Nut-drive pinion	1	**1227-C-939**	
2	Washer-drive pinion nut	1	**1229-E-1331**	
3	Input yoke assembly	1	**See SECTION 5**	
4	Capscrew-pinion cage	8	**S-2712-2**	
5	Washer-pinion cage	8	**1229-E-1513**	
6	Cover-pinion cage	1	**A-3266-Z-104**	Use with A-3226-P-692 cage
7	Oil seal	1	**A-1205-S-1527**	D series
			A-1205-K-635	F series-use with stamped steel cover
			A-1805-S-71	F series-use with integral cages
			A-1205-E-1929	Triple lip seal
8	Washer-bearing thrust	1	**1229-B-1562**	
9	Cone-bearing outer	1	**44143**	D series
			HM-803149	F series
10	Cup-bearing outer	1	**44348**	
			HM-803110	

D140, F106, F140, F145, F146, F149
3200-A-1093, 3200-R-1110, 3200-S-1111 & 3200-U-1113 (Continued)

ITEM	DESCRIPTION		QTY.	PART NUMBER	REMARKS
11	Cage-pinion bearing		1	**A-3226-E-655**	D series, standard
				A-3226-M-663 (2)	D series, front drive steering
				A-3226-P-692S	F series, stamped steel cover
				A-3226-J-738	F series, front drive steer., integral cage
				A-3226-K-739 (2)	F series, standard, integral cage
12	Shim, pinion bearing	.003	As reqd.	**2203-X-2728**	
		.005		**2203-Y-2729**	
		.010		**2203-Z-2730**	
13	Shim/spacer, bearing cage	.176	2	**2203-K-1571**	Use with D series. Available as KIT 1555, see SECTION 6
		.153	2	**2203-G-6923**	
		.154	2	**2203-H-6924**	
		.155	2	**2203-J-6926**	
		.156	2	**2203-K-6927**	
		.157	2	**2203-L-6928**	
		.158	2	**2203-M-6929**	
		.164	2	**2203-N-6930**	
		.170	2	**2203-P-6932**	
		.182	2	**2203-R-6934**	
13	Shim/spacer, bearing cage	.125	1	**2203-S-6857**	Use with F series. Available as KIT 599, see SECTION 6
		.126	1	**2203-T-6858**	
		.127	1	**2203-U-6859**	
		.128	1	**2203-V-6860**	
		.129	1	**2203-W-6861**	
		.130	1	**2203-X-6862**	
		.136	1	**2203-Y-6863**	
		.142	1	**2203-Z-6864**	
		.148	1	**2203-A-6865**	
		.154	1	**2203-B-6866**	
		.158	1	**2203-C-6867**	
14	Cup-bearing inner		1	**HM-803110**	
15	Cone-bearing inner		1	**HM-803146**	D series
				HM-803149	F series
16	Drive gear & pinion assy.		1	**See SECTION 4**	
17	Bearing-pinion spigot		1	**1228-C-55**	Bearing inner dia. .985
				1228-H-580	Bearing inner dia. 1.09
18	Snap ring-pinion spigot brg.			**1229-W-1167**	
19 (1), 20	Carrier & cap assy.		1	**A2-3200-A-1093**	Same as 1110, but has 10 holes in carrier & cap
				A2-3200-R-1110	16 Mounting holes
				A2-3200-S-1111	Same as 1110 except spotfaced carrier & cap
				A2-3200-U-1113	Same as 1093 except spotfaced carrier & cap
20	Bolt-carrier & cap assy.		4	**10-X-1599**	
21	Plug		1	**P-212**	
22	Ring-adjusting		2	**2214-E-57**	
23	Cotter key		1	**1199-R-2176**	

(1) Not serviced separately
(2) No longer available

D & F SERIES

D140, F106, F140, F145, F146, F149
3200-A-1093, 3200-R-1110, 3200-S-1111 & 3200-U-1113 (Continued)

ITEM	DESCRIPTION	QTY.	PART NUMBER	REMARKS
24	Cup-bearing-L.H. & R.H.	2	**JM-511910**	
25	Cone-bearing-L.H. & R.H.	2	**3994**	
26	Bolt-diff. case to gear	12	**15-X-1728**	Available as KIT 947, see SECTION 6
27	Washer-diff. case to gear	12	**1229-C-1511**	
28	Nut-diff. case to gear	12	**NL-18-1**	
29, 30, 31	Diff. case assy.	1	**A1-3235-Z-884**	Standard ratios
			A-3235-P-1134	Fast ratios
29, 30, 31, 32, 33, 34, 35, 36, 37	Diff. case assy. Std. ratios	1	**B33-3235-Z-884**	1.75"-16 spline
			A37-3235-Z-884	Hi-Traction, 1.77"-19 spline
			C31-3235-Z-884	Hi-Traction, 1.75"-34 spline
			A8-3235-Z-884	1.77"-19 spline
			C25-3235-Z-884	1.75"-34 spline
	Fast ratios	1	**A34-3235-P-1134**	1.77"-19 spline
			A21-3235-P-1134	1.75"-34 spline
30	Washer-diff. case	8	**1229-C-1511**	
31	Capscrew-diff. case	8	**S-2824A-2**	
32	Thread locking liquid/diff. case bolt	1	**2297-C-7049**	.34 oz tube. See NOTE below.
33	Washer-side gear thrust	2	**1229-Y-883**	2-3/8" inner dia.
			1229-W-1063	2-1/4" inner dia.
34	Gear-side	2	**2234-T-202**	Standard, 1.75"-16 spline
			2234-M-507	Hi-Traction, 1.77"-19 spline
			2234-X-518	Hi-Traction, 1.75"-34 spline
			2234-Q-797	Standard, 1.77"-19 spline
			2234-N-872	Standard, 1.75"-34 spline
35	Spider-diff.	1	**3278-Z-104**	
36	Pinion-diff.	4	**2233-A-105**	Standard
			2233-J-452	Hi-Traction
37	Washer-pinion thrust	4	**1229-Q-2877**	

NOTE: THREAD LOCKING LIQUID/DIFFERENTIAL CASE HALVES

When assembling differential case halves in Meritor axles, a thread locking adhesive should be used. The recommended procedure is as follows:

1. Wipe excess oil and residue from the threaded holes in the case. The holes should be relatively oil free.
2. If new bolts are being used, a yellow coating of Dri-Loc should appear on the threads. Assemble the case with these coated bolts to the required torque.
3. If the original bolts are reused or regular bolts without Dri-Loc are used, Meritor part no. 2297-C-7049 should be used as a thread locking adhesive. Apply the adhesive to the differential case holes only. Thread the bolts and tighten to the required torque.

IMPORTANT: Do not apply Meritor part no. 2297-C-7049 to Dri-Loc coated bolts.

Refer to Meritor Maintenance Manual 1 for complete procedure.

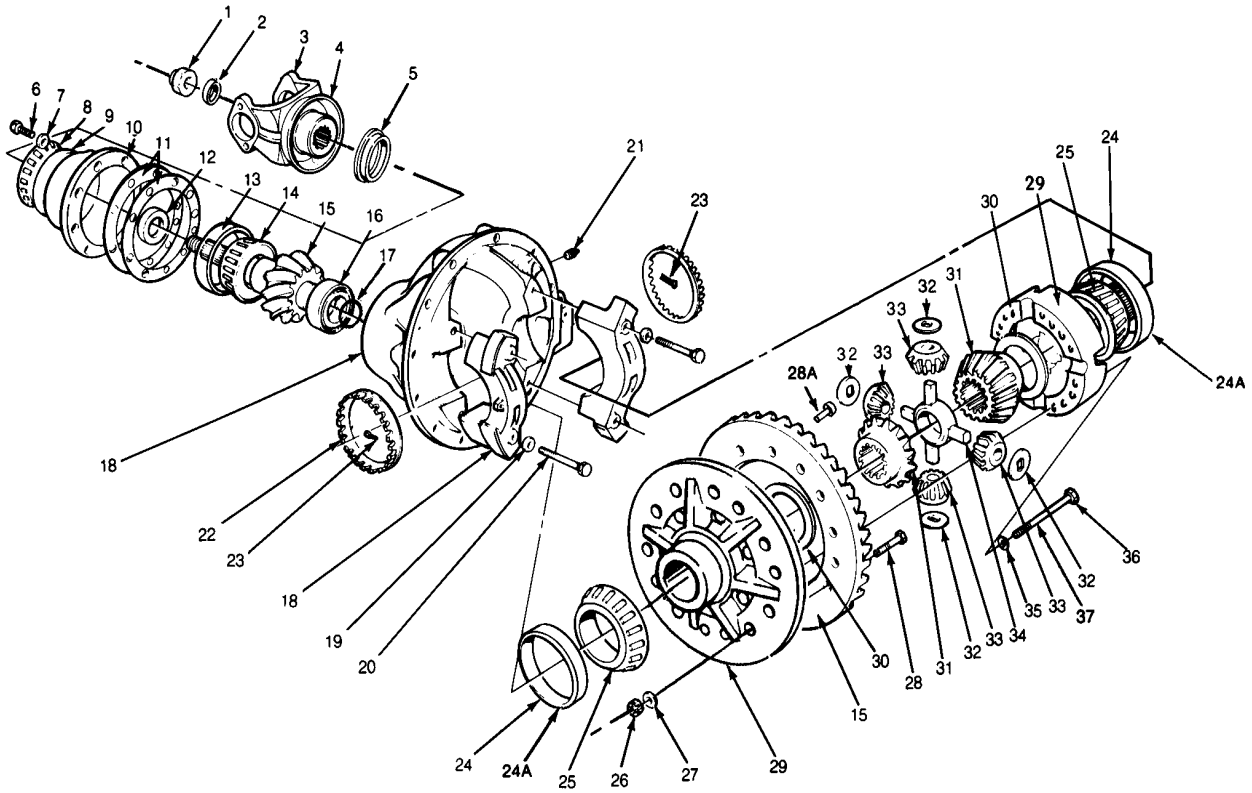

DESCRIPTION	PART NO.		RATIO
Differential carrier assembly (Specify ratio)	Standard	**A94-3200-Y-1091**	3.73, 4.10, 4.56, 4.88, 4.89, 5.29, 5.38, 5.83, 5.86, 6.14, 6.17, 6.83, 7.17, 7.80, 8.20
	NoSpin	**A85-3200-Y-1091**	
	High Traction	**A59-3200-Y-1091**	

ITEM	DESCRIPTION		QTY	PART NO.	REMARKS
1	Nut-drive pinion		1	**1227-K-1051**	
2	Washer-drive pinion		1	**1229-A-2653**	
3	Input yoke assy.		1	**See SECTION 5**	
4	Deflector-input yoke		1	**DEFR40-4**	(Ref.)
5	Oil seal pinion brg.-	Old style	1	**A-1205-J-1544**	
	cage assy.	New style	1	**A-1205-D-1928**	
6	Capscrew-pinion brg. cage		8	**S-2712-2**	
7	Washer-pinion brg. cage		8	**1229-E-1513**	
8	Cone-drive pinion outer brg.		1	**HM-804846**	
9	Cup-drive pinion outer brg.		1	**HM-804810**	
9, 10, 13	Pinion brg. cage assy.		1	**A-3226-R-902**	
11	Shim -pinion	.003	1	**2203-K-453**	
	bearing cage	.005	4	**2203-H-450**	
		.010	3	**2203-J-452**	
12	Spacer-pinion brg.		2	**See KIT 1556**	See SECTION 6
13	Cup-drive pinion inner brg.		1	**55437**	
14	Cone-drive pinion inner brg.		1	**55200C**	

H-172/173, L-172/173 SERIES

ITEM	DESCRIPTION	QTY	PART NO.	REMARKS
15	Drive gear, pinion & nut assy.	1	**See SECTION 4**	
16	Bearing-drive pinion spigot	1	**1228-F-552**	
17	Snapring-drive pinion spigot brg.	1	**1229-A-1301**	
18, 19, 20	Differential carrier & cap assy.	1	**A2-3200-Y-1091**	Malleable
19	Washer-diff. brg. cap	4	**1229-W-1557**	
20	Capscrew-diff. brg. cap	4	**S-21036-2**	
21	Plug-magnetic	1	**1250-E-473**	
22	Adjustin ring-R.H. & L.H.	2	**2214-V-178**	
23	Cotter pin-adjusting ring	2	**1199-M-2457**	
24	Cup-diff. bearing	2	**JLM-714110**	
24A	Adhesive-bearing cup	1	**2297-T-4180 (2)**	Not shown. (2) tubes .5cc (One tube per bearing)
25	Cone-diff. bearing	2	**JLM-714149**	
26	Nut-diff. case to gear	12	**NL-110-1**	Available as KIT 570, see SECTION 6
27	Washer-diff. case to gear	12	**1229-U-1503**	
28	Bolt-diff. case to gear	12	**15-X-1523**	
28A	Rivet-bevel gear to case	12	**RV-71013**	Optional
29, 35, 36	Differential case assembly	1	**A-3235-S-1371**	
29, 30, 31, 32, 33, 34, 35, 36	Diff. case & nest assy.	1	**A1-3235-S-1371**	
30	Thrust washer-side gear	2	**1229-T-1034**	KIT 396 with spider. KIT 397 less spider. See SECTION 6
31	Side gear-diff.	2	**2234-F-734**	
32	Thrust washer-diff. pinion	4	**1229-R-1032**	
33	Gear-diff. pinion	4	**2233-U-151**	
34	Spider-diff.	1	**3278-H-86**	
35	Washer-diff. case	16	**1229-C-1511**	
36	Capscrew-diff. case	16	**S-2826P-1**	
37	Thread locking liquid/diff. case	1	**2297-C-7049**	.34 oz. tube, See NOTE below.

(2) No longer available

NOTE: THREAD LOCKING LIQUID/DIFFERENTIAL CASE HALVES

When assembling differential case halves in Meritor axles, a thread locking adhesive should be used.
The recommended procedure is as follows:

1. Wipe excess oil and residue from the threaded holes in the case. The holes should be relatively oil free.
2. If new bolts are being used, a yellow coating of Dri-Loc should appear on the threads. Assemble the case with these coated bolts to the required torque.
3. If the original bolts are reused or regular bolts without Dri-Loc are used, Meritor part no. 2297-C-7049 should be used as a thread locking adhesive. Apply the adhesive to the differential case holes only. Thread the bolts and tighten to the required torque.

IMPORTANT: Do not apply Meritor part no. 2297-C-7049 to Dri-Loc coated bolts.
Refer to Meritor Maintenance Manual 1 for complete procedure.

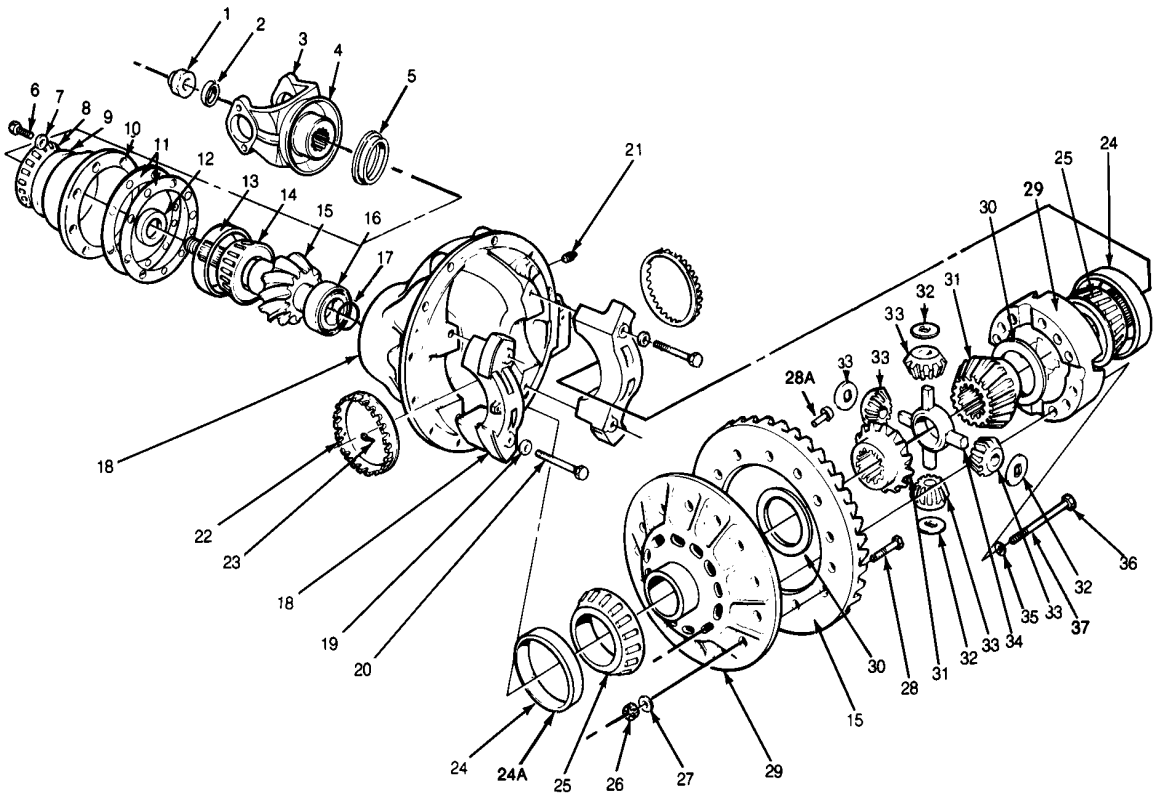

DESCRIPTION	PART NO.	RATIO
Differential carrier assembly (Specify ratio)	**B2-3200-Y-1091**	3.73, 4.10, 4.56, 4.88, 5.38, 5.86, 6.14, 6.83, 7.17, 7.80, 8.20

ITEM	DESCRIPTION		QTY	PART NO.	REMARKS
1	Nut-drive pinion		1	**1227-K-1051**	
2	Washer-drive pinion		1	**1229-A-2653**	
3	Input yoke assy.		1	**See SECTION 5**	
4	Deflector-input yoke		1	**DEFR40-4**	(Ref.)
5	Oil seal pinion brg.-	Old style	1	**A-1205-J-1544**	
	cage assy.	New style	1	**A-1205-D-1928**	
6	Capscrew-pinion brg. cage		8	**S-2712-2**	
7	Washer-pinion brg. cage		8	**1229-E-1513**	
8	Cone-drive pinion outer brg.		1	**HM-804846**	
9	Cup-drive pinion outer brg.		1	**HM-804810**	
9, 10, 13	Pinion brg. cage assy.		1	**A-3226-R-902**	
11	Shim -pinion	.003	1	**2203-K-453**	
	bearing cage	.005	4	**2203-H-450**	
		.010	3	**2203-J-452**	
12	Spacer-pinion brg.		2	**See KIT 1556**	See SECTION 6
13	Cup-drive pinion inner brg.		1	**55437**	
14	Cone-drive pinion inner brg.		1	**55200C**	

P-174 SERIES

ITEM	DESCRIPTION	QTY	PART NO.	REMARKS
15	Drive gear, pinion & nut assy.	1	**See SECTION 4**	
16	Bearing-drive pinion spigot	1	**1228-F-552**	
17	Snapring-drive pinion spigot brg.	1	**1229-A-1301**	
18, 19, 20	Differential carrier & cap assy.	1	**A2-3200-Y-1091**	Malleable
19	Washer-diff. brg. cap	4	**1229-W-1557**	
20	Capscrew-diff. brg. cap	4	**S-21036-2**	
21	Plug-magnetic	1	**1250-E-473**	
22	Adjustin ring-R.H. & L.H.	2	**2214-V-178**	
23	Cotter pin-adjusting ring	2	**1199-M-2457**	
24	Cup-diff. bearing	2	**JLM-714110**	
24A	Adhesive-bearing cup	1	**2297-T-4180 (2)**	Not shown. (2) tubes .5cc (One tube per bearing)
25	Cone-diff. bearing	2	**JLM-714149**	
26	Nut-diff. case to gear	12	**NL-110-1**	Available as KIT 570, see SECTION 6
27	Washer-diff. case to gear	12	**1229-U-1503**	
28	Bolt-diff. case to gear	12	**15-X-1523**	
28A	Rivet-bevel gear to case	12	**RV-71013**	Optional
29, 35, 36	Differential case assembly	1	**A-3235-S-1371**	
29, 30, 31, 32, 33, 34, 35, 36	Diff. case & nest assy.	1	**A53-3235-S-1371**	
30	Thrust washer-side gear	2	**1229-T-1034**	KIT 326 with spider. KIT 325 less spider. See SECTION 6
31	Side gear-diff.	2	**2234-C-783**	
32	Thrust washer-diff. pinion	4	**1229-R-1032**	
33	Gear-diff. pinion	4	**2233-U-151**	
34	Spider-diff.	1	**3278-S-305**	
35	Washer-diff. case	16	**1229-C-1511**	
36	Capscrew-diff. case	16	**S-2826P-1**	
37	Thread locking liquid/diff. case	1	**2297-C-7049**	.34 oz. tube, See NOTE below.

(2) No longer available

NOTE: THREAD LOCKING LIQUID/DIFFERENTIAL CASE HALVES

When assembling differential case halves in Meritor axles, a thread locking adhesive should be used.
The recommended procedure is as follows:

1. Wipe excess oil and residue from the threaded holes in the case. The holes should be relatively oil free.
2. If new bolts are being used, a yellow coating of Dri-Loc should appear on the threads. Assemble the case with these coated bolts to the required torque.
3. If the original bolts are reused or regular bolts without Dri-Loc are used, Meritor part no. 2297-C-7049 should be used as a thread locking adhesive. Apply the adhesive to the differential case holes only. Thread the bolts and tighten to the required torque.

IMPORTANT: Do not apply Meritor part no. 2297-C-7049 to Dri-Loc coated bolts.
Refer to Meritor Maintenance Manual 1 for complete procedure.

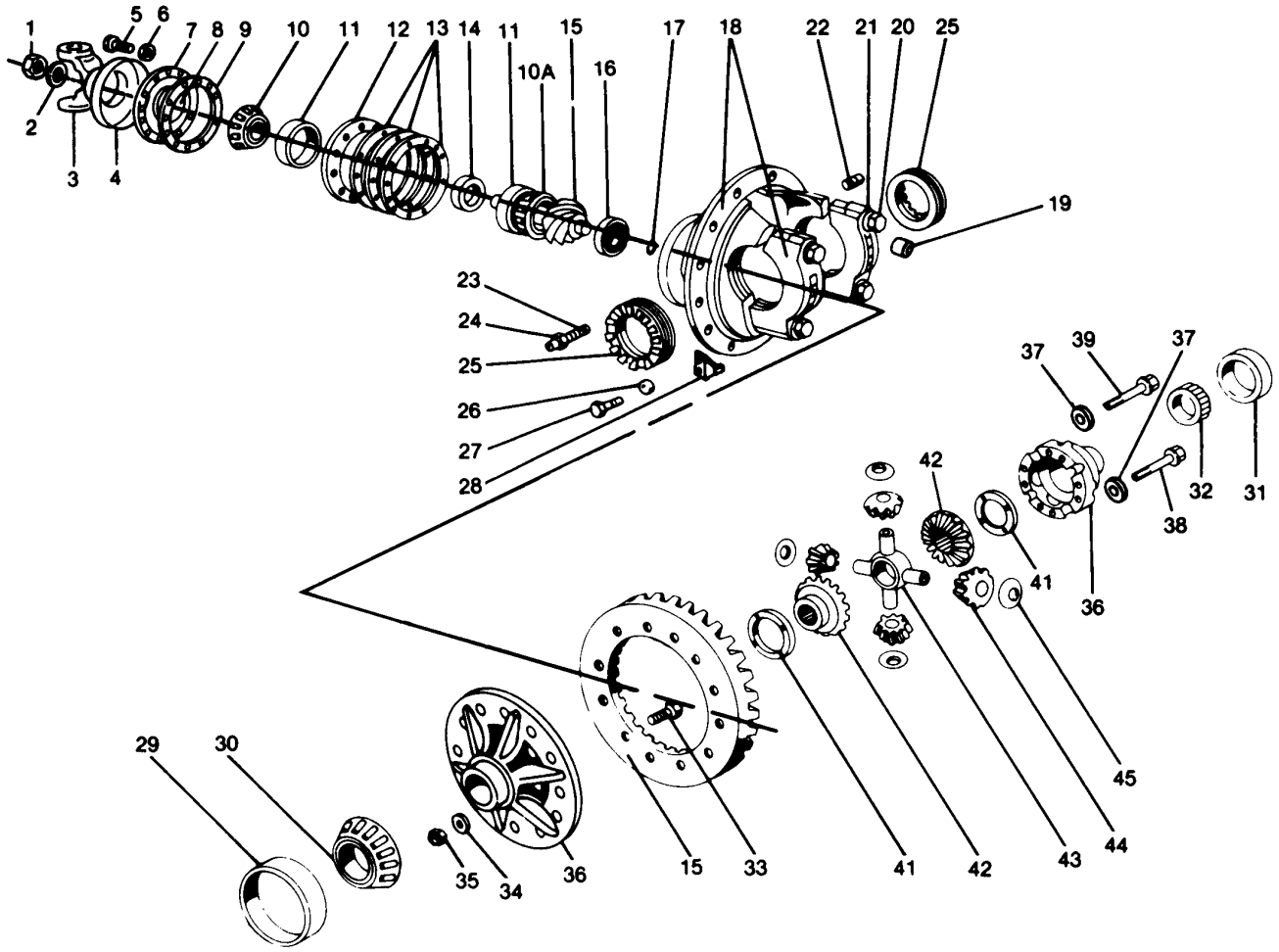

AVAILABLE DIFFERENTIAL CARRIERS

AXLE MODEL	DIFFERENTIAL CARRIER ASSEMBLY PART NUMBER	DESCRIPTION	GEAR RATIOS
R/S-170 Malleable Iron Carrier	**D16-3200-G-605**	Diff. carrier assy., std. diff., (9/16 tooth combination), 2.38"-24 diff. spline, less yoke	ALL RATIOS For remanufactured carriers, less yoke, malleable assemblies only, order by specifying R170 plus ratio or S170 plus ratio.
R/S-170 Aluminum Carrier	**A92-3200-E-603**	Diff. carrier assy., std. diff., (9/16 tooth combination), 2.38"-24 diff. spline, less yoke	
R/S-170 Malleable Iron Carrier	**D15-3200-G-605**	Diff. carrier assy., traction equalizer, (9/16 tooth combination), 2.38"-24 diff. spline, less yoke	
R/S-170 Aluminum Carrier	**A93-3200-E-603**	Diff. carrier assy., traction equalizer, (9/16 tooth combination), 2.38"-24 diff. spline, less yoke	
R/S-170 Malleable Iron Carrier	**D28-3200-G-605**	Diff. carrier assy., std. diff., (9/16 tooth combination), 2.38"-24 diff. spline, less yoke	
R/S-170 Malleable Iron w/NoSpin	**D57-3200-G-605**	Diff. carrier assy., NoSpin diff., 2.38"-24 diff. spline, less yoke	

R-170, S-170 SERIES

ITEM	DESCRIPTION	QTY.	PART NO.	REMARKS
1	Nut-drive pinion	1	**1227-D-940**	
2	Washer-drive pinion	1	**1229-N-1730**	
3, 4	Input yoke assembly	1	**See SECTION 5**	
4	Deflector-input yoke	1	**DEFR50-2**	
5	Capscrew-bearing cage	8	**S-2816-2**	
6	Washer-bearing cage	8	**1229-C-1511**	
7, 8	Pinion cage cover & seal assembly	1	**A-3266-D-160**	All axles built before 12-1-83
		---	**Not required**	All axles built after 12-1-83
8	Oil seal- pinion	1	**A-1805-F-162**	All axles built before 12-1-83
		1	**A-1205-Q-1915**	All axles built after 12-1-83
9	Gasket-pinion cage cover	1	**2208-H-424**	All axles built before 12-1-83
10	Cone-drive pinion outer bearing	1	**H-715334**	
10A	Cone-drive pinion inner bearing	1	**H-715343**	
11	Cup-drive pinion inner & outer brg.	2	**H-715311**	
12 (1), 11	Bearing cage & cup assembly	1	**A-3226-F-188**	All axles built before 12-1-83
		1	**KIT 1589**	All axles built after 12-1-83
13	Shim-bearing cage .003	1	**2203-L-1260**	
	.005	1	**2203-A-469**	
	.010	3	**2203-B-470**	
14	Spacer-pinion bearing	As req'd	**See KIT 521, SECT. 6**	
15	Drive gear & pinion assembly	1	**See SECTION 4**	
16	Bearing drive pinion spigot	1	**1228-B-262**	All ratios except 7.40
			1228-A-261	7.40 ratio only
17	Snap ring-spigot bearing drive pinion	1	**1229-L-1624**	All ratios except 7.40
			1229-K-1623	7.40 ratio only
18 (1), 19 (1) 20, 21	Diff. carrier & cap assembly	1	**A2-3200-G-605**	Malleable
			A2-3200-E-603	Aluminum
19 (1)	Dowel-bearing cap	4	**1898-Z-1066**	
20	Capscrew-bearing cap	4	**S-11444-2**	Malleable carriers
			10-X-1022 (2)	Aluminum carriers
21	Washer-bearing cap	4	**1229-M-1625**	
22	Plug-oil fill & inspection	1	**P-212**	
23	Screw-drive gear thrust	1	**15-X-1167**	
24	Nut-drive gear thrust screw	1	**1227-D-472**	
25	Ring-diff. bearing adjusting	1	**2214-M-91**	L.H.
		1	**2214-K-89**	R.H.
26	Washer-lock adjusting ring	4	**1229-E-1669**	
27	Capscrew-lock adjusting ring	4	**S-256-2**	
28	Lock-adjusting ring	2	**1220-B-1094**	
29	Cup-diff. bearing L.H.	1	**52618**	
30	Cone-diff. bearing L.H.	1	**52387**	
31	Cup-diff. bearing R.H.	1	**592A**	
32	Cone-diff. bearing R.H.	1	**598**	
33	Bolt-diff. case to gear	16	**15-X-1522**	
34	Washer-diff case to gear	16	**1229-U-1503**	
35	Nut-diff. case to gear	16	**NL-110-1**	

(1) Not serviced separately
(2) No longer available

ITEM	DESCRIPTION	QTY.	PART NO.	REMARKS
36 (1), 37, 38, 39	Differential case assembly (Non-Traction equalizer only)	1	**A77-3235-Z-728**	Fast Ratios - 3.42, 3.55, 3.70, 3.90, 4.11
			B23-3235-B-730	Std. Ratios - 4.33, 4.63, 4.88, 5.29, 5.57, 5.86, 6.14, 6.83, 7.40
	Differential case assembly Traction equalizer, interim design	1	**A-3235-R-1500**	No longer available. Replaced by A-3235-G-1541 (Fast Ratios)
			A-3235-S-1501	No longer available. Replaced by A-3235-H-1542 (Std. Ratios)
	Differential case assembly Traction equalizer, final design	1	**A-3235-G-1541**	Fast Ratios - 3.42, 3.55, 3.70, 3.90, 4.11
			A-3235-H-1542	Std. Ratios - 4.33, 4.63, 4.88, 5.29, 5.57, 5.86, 6.14, 6.83, 7.40
36 (1), 37, 38, 39, 40, 41, 42, 43, 44, 45	Differential case assembly (9/16 tooth combination)	1	**A78-3235-Z-728**	Fast Ratios - 3.42, 3.55, 3.70, 3.90, 4.11
			B24-3235-B-730	Std. Ratios - 4.33, 4.63, 4.88, 5.29, 5.57, 5.86, 6.14, 6.83, 7.40
	Differential case assembly (9/14 tooth combination)	1	**A66-3235-Z-728**	Fast Ratios - 3.42, 3.55, 3.70, 3.90, 4.11
			B4-3235-B-730	Std. Ratios - 4.33, 4.63, 4.88, 5.29, 5.57, 5.86, 6.14, 6.83, 7.40
	Differential case assembly (9/12 tooth combination High Traction)	1	**B3-3235-Z-728 (2)**	Fast Ratios - 3.42, 3.55, 3.70, 3.90, 4.11
			A17-3235-B-730	Std. Ratios - 4.33, 4.63, 4.88, 5.29, 5.57, 5.86, 6.14, 6.83, 7.40
	Differential case assembly (No Spin)	1	**A80-3235-Z-728**	Fast Ratios - 3.42, 3.55, 3.70, 3.90, 4.11
			B26-3235-B-730 (2)	Std. Ratios - 4.33, 4.63, 4.88, 5.29, 5.57, 5.86, 6.14, 6.83, 7.40
36 (1), 37, 38, 39, 41, 42, 43, 44, 45, 46, 47, 48, 49, 50, 51, 52, 53	Differential case assembly Traction equalizer, interim design	1	**A1-3235-R-1500 (2)**	No longer available. Replaced by A1-3235-G-1541 (Fast Ratios)
			A1-3235-S-1501 (2)	No longer available. Replaced by A1-3235-H-1542 (Std. Ratios)
	Differential case assembly Traction equalizer, final design	1	**A1-3235-G-1541 (2)**	Fast Ratios - 3.42, 3.55, 3.70, 3.90, 4.11
			A1-3235-H-1542 (2)	Std. Ratios - 4.33, 4.63, 4.88, 5.29, 5.57, 5.86, 6.14, 6.83, 7.40
37	Washer-diff.case bolt	12	**1229-U-1503**	
38	Bolt-diff. case halves (short)	4	**S-21020A-2**	
39	Bolt-diff. case halves (long)	8	**S-21028A-2**	
40	Thread locking liquid/diff. case bolt	1	**2297-C-7049**	.34 oz. tube, see NOTE below.
41	Washer-main diff. side gear thrust	2	**1229-E-993**	Standard differential
		2	**1229-V-2024**	Traction equalizer differential
42	Side gear-main diff.	2	**2234-F-344**	Std. diff. (9/16 tooth combination)
		2	**2234-T-358**	Std. diff. (9/14 tooth combination)
		2	**2234-E-473**	High-Traction differential
		2	**2234-E-629**	Traction equalizer (except final design)
		1	**2234-J-894 (2)**	L.H. Traction equalizer
		1	**2234-E-629**	R.H. (final design)
43	Spider-main diff.	1	**3278-A-79**	
44	Gear-Diff. pinion (main)	4	**2233-U-99**	(9/16 tooth combination & T.E.)
		4	**2233-C-159**	(9/14 tooth combination)
		4	**2233-Q-459**	High-Traction

(1) Not serviced separately

(2) No longer available

R-170, S-170 SERIES

ITEM	DESCRIPTION		QTY.	PART NO.	REMARKS
45	Washer-diff. pinion thrust (main)		4	**1229-D-992**	
46	Clutch- drive disc		24	**2297-S-1683**	Traction equalizer (original design)
			22	**2297-S-1683**	(interim design)
			31	**2297-S-1683**	(final design)
47	Clutch driven disc		22	**2297-W-1687 (2)**	(original design)
			20	**2297-W-1687 (2)**	(interim design)
			29	**2297-W-1687 (2)**	(final design)
48	Shims	.013 inch	As req'd.	**2203-C-4709**	Traction equalizer
		.015 inch		**2203-D-4710 (2)**	
		.010 inch		**2203-E-4711**	
		.005 inch		**2203-F-4712 (2)**	
49	Drive disc		2	**2297-T-1684**	
50	Belleville springs		8	**2258-P-692**	Traction equalizer (except final design)
			12	**2258-P-692**	Traction equalizer (final design)
51	Pin-retainer plate		8	**19-X-136 (2)**	Traction equalizer
52	Retainer plate		2	**1229-E-2891 (2)**	
53	Snap ring		2	**1229-W-2025**	

NOTE: THREAD LOCKING LIQUID/DIFFERENTIAL CASE HALVES

When assembling differential case halves in Meritor axles, a thread locking adhesive should be used. The recommended procedure is as follows:

1. Wipe excess oil and residue from the threaded holes in the case. The holes should be relatively oil free.
2. If new bolts are being used, a yellow coating of Dri-Loc should appear on the threads. Assemble the case with these coated bolts to the required torque.
3. If the original bolts are reused or regular bolts without Dri-Loc are used, Meritor part no. 2297-C-7049 should be used as a thread locking adhesive. Apply the adhesive to the differential case holes only. Thread the bolts and tighten to the required torque.

IMPORTANT: Do not apply Meritor part no. 2297-C-7049 to Dri-Loc coated bolts.

Refer to Meritor Maintenance Manual 1 for complete procedure.

FRONT-MOUNTED, SINGLE-REDUCTION TANDEM DRIVE UNIT (SL/SQHD FORWARD-REAR CARRIER 3200-T-800)

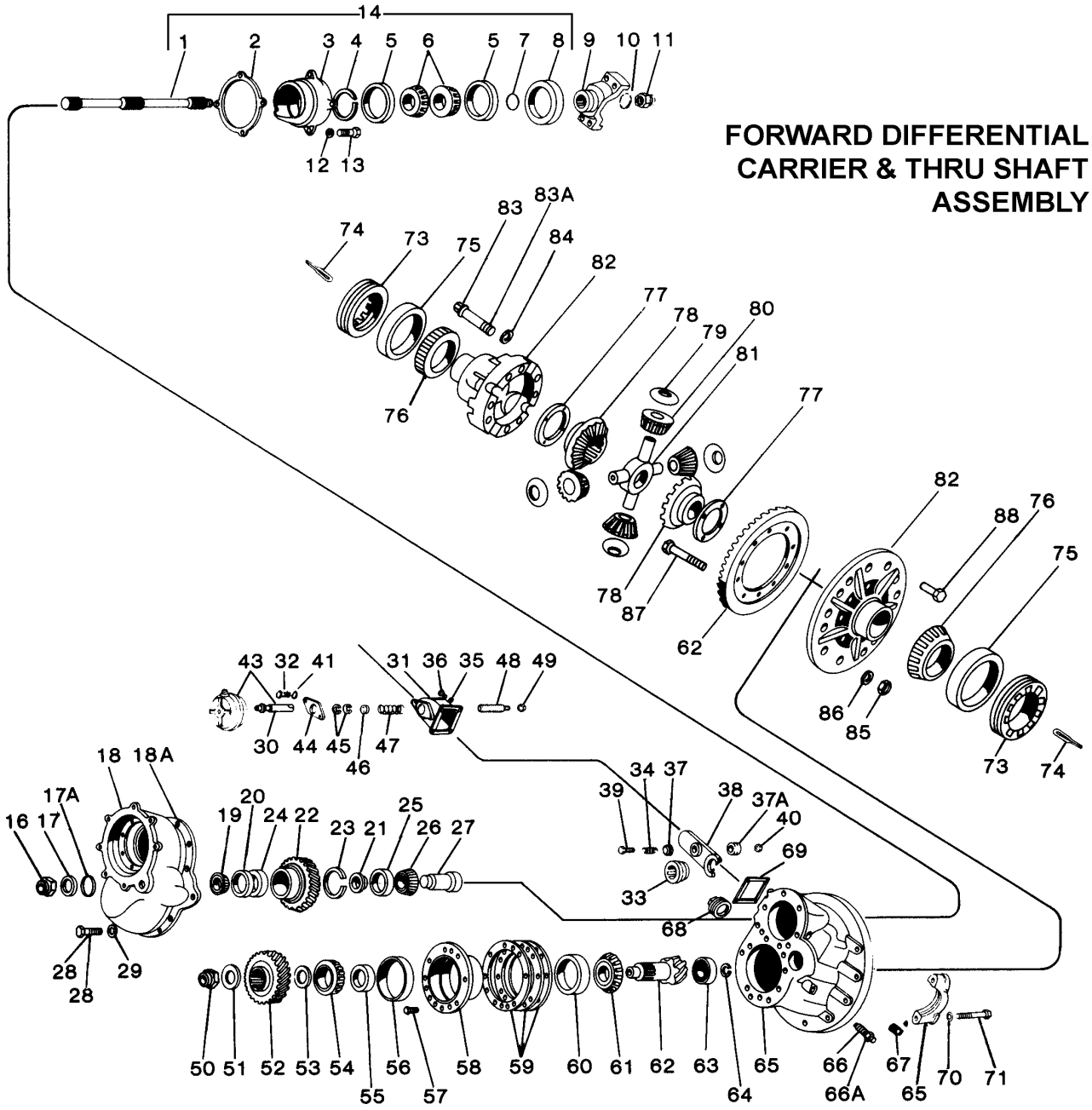

SL/SQHD FAMILY

AVAILABLE FORWARD DIFFERENTIAL CARRIERS

AXLE MODEL	DIFFERENTIAL CARRIER ASSEMBLY PART NUMBER	DESCRIPTION	GEAR RATIOS
SLHD	**K7-3200-T-800**	With inter-axle diff., less yoke	ALL RATIOS
Malleable Iron Carrier	**K10-3200-T-800**	With inter-axle diff., w/ A1-3897-L-1000 yoke assy.	
SQHD	**K8-3200-T-800**	With inter-axle diff., less yoke	For remanufactured
Malleable Iron Carrier	**K9-3200-T-800**	With inter-axle diff., w/ A1-3897-L-1000 yoke assy.	carriers, less yoke,
SLHD	**C40-3200-U-801**	With inter-axle diff., less yoke	malleable assemblies
Aluminum Carrier	**C44-3200-U-801**	With inter-axle diff., w/ A1-3897-L-1000 yoke assy.	only order by specifying
SQHD	**C41-3200-U-801**	With inter-axle diff., less yoke	LHD plus ratio or
Aluminum Carrier	**C43-3200-U-801**	With inter-axle diff., w/ A1-3897-L-1000 yoke assy.	QHD plus ratio

(FORWARD-REAR CARRIER 3200-T-800)

ITEM	DESCRIPTION	QTY	PART NO.	REMARKS
1	Thru shaft	1	**A-3880-K-921**	Includes Item 11
2	Gasket	1	**2208-C-445**	
3, 5	Rear bearing cage & cup assy.	1	**A-3226-Q-537**	
1, 3, 4, 5, 6, 7, 8, 12	Rear bearing cage, oil seal, thru shaft, bearing & snapring assy.	1	**A1-3226-Q-537**	
4	Snapring-thru shaft	As req'd.	**See KIT 530, SECTION 6**	
5	Bearing cup	2	**LM-603011**	
6	Bearing cone	2	**LM-603049**	
7	Snapring-thru shaft	1	**1829-A-859**	
8	Oil seal assy.-thru shaft	1	**A-1205-K-1779**	
9	Yoke assy.-thru shaft (output)	1	**See SECTION 5**	
10	Washer-thru shaft	1	**1229-A-2653**	
11	Nut-thru shaft	1	**1227-Z-936**	
12	Washer-thru shaft cage	4	**1229-K-1597**	
13	Capscrew-thru shaft cage	4	**S-268-2**	
14	Kit (pre-assembled)	1	**See MPS-1842, SECT. 6**	
16	Nut-idler gear shaft	1	**1227-Z-936**	
17	Washer-idler gear shaft	1	**1229-A-2653**	
17A	"O" ring-idler gear shaft	1	**2208-U-463**	
18	Case-adapter (case only)	1	**3280-Y-3977**	
16, 17, 17A, 18, 20, 22, 23, 24, 25	Adapter case & idler gear assy.	1	**A-3280-Y-3977**	
18A	Gasket-adapter case (Silastic)	3 oz.	**2297-A-7021**	
19	Front bearing cone	1	**31597**	
20	Front bearing cup	1	**31520**	
21	Spacers-front bearing	As req'd.	**See KIT 591, SECTION 6**	
19, 20, 21, 22, 23, 24, 25	Idler gear, bearing & spacer assy.	1	**A1-3892-D-1824**	
20, 22, 23, 24, 25	Idler gear, bearing cup, spacer & ring assy.	1	**A-3892-D-1824**	
23	Snapring-idler gear bearing	1	**1229-N-1470**	
24	Spacer-idler gear bearing	1	**1244-X-726**	
25	Rear bearing cup	1	**31520**	
26	Rear bearing cone	1	**31597**	

(FORWARD-REAR CARRIER 3200-T-800) Continued

ITEM	DESCRIPTION	QTY	PART NO.	REMARKS
27	Shaft-idler gear	1	**3280-P-2226**	
28	Capscrew- (long)	2	**SP-1035**	
	adapter case (short)	8	**S-2812-2**	Aluminum carriers
	(short)	8	**S-2811-2**	Malleable carriers
29	Washer-adapter case	10	**1229-C-1511**	
30 (1)	Shift shaft-inter axle	1	**2297-N-768**	Part of Item 43
31	Housing-shift shaft	1	**3280-D-2526 (2)**	
32	Capscrew-shift shaft hsg. mtg.	2	**S-268-2**	
33	Collar-shift fork	1	**3280-X-2520**	
34	Spring-shift fork	1	**2258-G-397**	
35	Washer-shift hsg. mtg.	4	**WA-16**	
36	Capscrew-shift hsg. mtg.	4	**S-268-2**	
37	Washer-shift fork seat	1	**1229-M-1599**	
37A	Ball-shift fork lock	1	**1199-V-1712**	
38	Shift fork assy.	1	**A-2297-E-811 (2)**	
39	Bolt-shift fork	1	**15-X-1306**	
40	Nut-shift fork	1	**NL-16-1**	
41	Washer-shift shaft chamber mtg.	2	**1229-B-1666**	
30 (1), 41	Shift chamber & hsg. assy. (complete)	1	**A1-3280-D-2526 (2)**	
43, 30 (1)	Air chamber & shift shaft assy.	1	**A-3261-C-289**	
44	Gasket-shift shaft housing	1	**2208-M-429**	
45	Snapring-shift shaft	2	**1229-W-1245**	
46	Washer-shift shaft	1	**1229-R-798**	
47	Spring-shift chamber	1	**2258-U-411**	
48	Adjusting bolt-shift chamber	1	**15-X-851**	
49	Nut-shift chamber adjusting bolt	1	**13-X-163**	
50	Nut-drive pinion	1	**1227-N-898**	
51	Washer-drive pinion nut	1	**1229-N-1730**	
52, 50	Driven drop box gear & 22 spline	1	**A-3892-S-4517**	Service KIT 349, SECTION 6
	drive pinion nut assy. 39 spline		**3892-C-4735 (4)**	Service KIT 2117, SECTION 6
53	Spacer-pinion bearing	1	**1229-S-1449**	Use with these ratios only: 3.55, 3.70, 3.90, 4.11, 4.33, 4.44, 4.63, 5.29, 5.83
54	Cone-outer bearing	1	**72200C**	
55	Spacer-forward bearing	As req'd.	**See KIT 592, SECTION 6**	
56	Cup-outer bearing	1	**72487**	
57	Capscrew-pinion bearing cage	8	**10-X-1027 (2)**	Malleable carriers
		8	**10-X-1028 (2)**	Aluminum carriers
58	Drive pinion cage & cup assy.	1	**A-3226-A-131**	
59	Shim .003	1	**2203-L-7448**	
	.005	3	**2203-K-7447**	
	.010	4	**2203-J-7446**	
	Shim	1	**2203-T-8366**	Use with these ratios only: 4.88, 6.17, 6.83, 7.20, 7.80, 8.60
60	Cup-inner bearing	1	**72487**	
61	Cone-inner bearing	1	**72200C**	
62 (1)	Drive gear & pinion assy.	1	**See SECTION 4**	
63	Bearing-drive pinion rear	1	**1228-F-552**	
64	Lockring-drive pinion	1	**1229-A-1301**	

(1) Not serviced separately (2) No longer available

(4) New gear -- not interchangeable with A-3892-S-4517 gear

SL/SQHD FAMILY

(FORWARD-REAR CARRIER 3200-T-800) Continued

ITEM	DESCRIPTION	QTY	PART NO.	REMARKS
65 (1), 70, 71	Differential carrier & cap assy.	1	**A2-3200-T-800**	Malleable
			A2-3200-U-801	Aluminum
66	Thrust screw-drive gear	1	**15-X-1025**	
66A	Nut-thrust screw-drive gear	1	**13-X-41**	
67	Plug-oil inspection	1	**1850-T-150**	
68	Plug-oil filler hole	1	**P-212**	
69	Gasket-shift housing	1	**2208-D-446**	
70	Washer-bearing cap	4	**1229-V-1556**	
71	Capscrew-bearing cap	4	**S-21238-2**	Malleable carriers
		4	**10-X-1021 (2)**	Aluminum carriers
77, 78, 79, 80, 81, 82 (1), 83, 84	Differential case & nest assembly	1	**B11-3235-U-619 †**	Standard ratio
		1	**A87-3235-V-620 †**	Fast ratio
		1	**B5-3235-U-619 ††**	Standard ratio
		1	**A84-3235-V-620 ††**	Fast ratio
82 (1), 83, 84	Differential case assy.	1	**B3-3235-U-619**	Standard ratio
		1	**A83-3235-V-620**	Fast ratio
73	Adjusting ring-diff. bearing	2	**2214-G-215**	
74	Cotter pin lock-adjusting ring	2	**1199-R-2176**	
75	Differential bearing cup	2	**493**	
76	Bearing-cone	2	**496**	Standard ratios
		1	**497**	Fast ratios
77	Thrust washer-side gear	2	**1229-T-1034**	
78	Side gear differential	2	**2234-X-310 †**	(2"-21 spline)
		2	**2234-X-700 ††**	(2-1/8"-22 spline)
79	Thrust washer-pinion	4	**1229-R-1032**	
80	Pinion-differential	4	**2233-U-151**	
81	Spider-differential	1	**3278-S-305**	
83	Bolt-differential case	16	**S-2826P-1**	
83A	Thread locking liquid/diff. case	1	**2297-C-7049**	.34 oz. tube, See NOTE below
84	Washer-differential case	16	**1229-C-1511**	
85	Nut-gear to case	12	**NL-110-1**	Available as KIT 570, see SECTION 6
86	Washer-gear to case	12	**1229-U-1503**	
87	Bolt-gear to case (bolted version)	12	**15-X-1523**	
88	Rivet-gear to case (riveted version)	12	**RV-71013**	

(1) Not serviced separately † SLHD only †† SQHD only
(2) No longer available

NOTE: THREAD LOCKING LIQUID/DIFFERENTIAL CASE HALVES

When assembling differential case halves in Meritor axles, a thread locking adhesive should be used.
The recommended procedure is as follows:

1. Wipe excess oil and residue from the threaded holes in the case. The holes should be relatively oil free.
2. If new bolts are being used, a yellow coating of Dri-Loc should appear on the threads. Assemble the case with these coated bolts to the required torque.
3. If the original bolts are reused or regular bolts without Dri-Loc are used, Meritor part no. 2297-C-7049 should be used as a thread locking adhesive. Apply the adhesive to the differential case holes only. Thread the bolts and tighten to the required torque.

IMPORTANT: Do not apply Meritor part no. 2297-C-7049 to Dri-Loc coated bolts.
Refer to Meritor Maintenance Manual 1 for complete procedure.

(FORWARD-REAR CARRIER 3200-T-800) Continued

INTER-AXLE DIFFERENTIAL ASSEMBLY

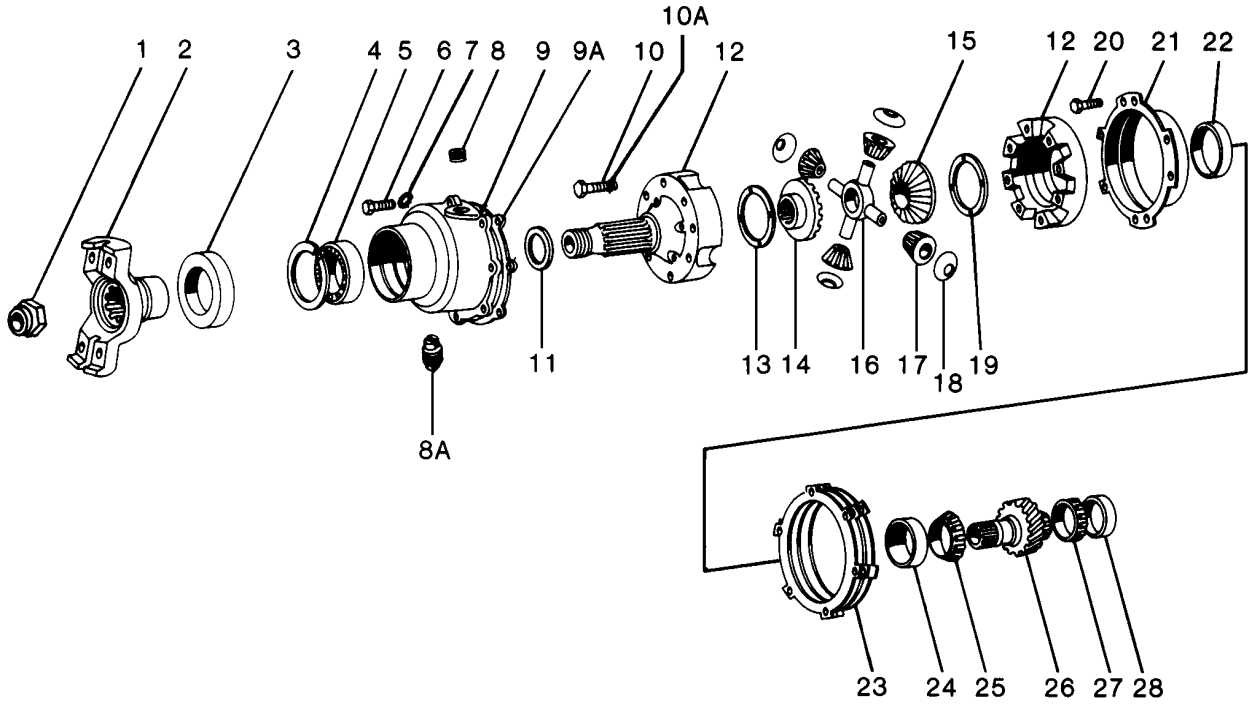

ITEM	DESCRIPTION	QTY	PART NO.	REMARKS
1	Nut-input yoke	1	**1227-J-946**	1-1/2" x 12 Coarse Thread
2	Yoke-input shaft	1	**See SECTION 5**	
3	Oil seal assy.	1	**A-1205-L-714**	
4	Snapring	1	**1229-P-1446**	
5	Bearing-front radial ball	1	**1228-V-204**	
6	Capscrew-inter-axle housing	8	**S-2711-2**	
7	Washer-inter-axle housing	8	**1229-E-1513**	
8	Plug-oil filter	1	**P-212**	
8A	Plug-oil drain	1	**1850-T-150**	
9	Housing-inter-axle differential	1	**3280-V-2518**	
9A	Gasket-inter-axle diff. hsg. (Silastic)	3 oz.	**2297-A-7021**	See KIT 533, SECTION 6
3, 4, 5, 9	Housing assy. inter-axle diff.	1	**A-3280-V-2518**	
10	Capscrew-inter-axle diff. case	8	**S-2824A-2**	
10A	Thread locking liquid/diff. case	1	**2297-C-7049**	.34 oz. tube. See NOTE below
11	Spacer-bearing	1	**1244-Y-701**	

INTER-AXLE DIFFERENTIAL ASSEMBLY
(FORWARD-REAR CARRIER 3200-T-800) Continued

ITEM	DESCRIPTION	QTY	PART NO.	REMARKS
1, 12 (1), 22	Inter-axle diff. case assy.	1	**A2-3235-T-1528**	
1, 10, 12 (1), 13, 14, 15, 16, 17, 18, 19, 22	Inter-axle diff. case & nest assy. (complete)	1	**A1-3235-T-1528**	
13	Thrust washer-forward side gear	1	**1229-J-1622**	Available as KIT 322, see SECTION 6
14	Side gear-forward	1	**2234-M-325**	
15	Side gear-rear	1	**2234-B-340**	
16	Spider-differential	1	**3278-M-91**	
17	Pinion-differential	4	**2233-A-105**	
18	Thrust washer-pinion	4	**1229-Q-2877**	
19	Thrust washer-rear side gear	1	**1229-G-1619**	
20	Capscrew-bearing cage	6	**S-267-2**	
21	Cage-bearing	1	**3226-F-708 (1)**	
21, 24	Cage & cup assy.-bearing	1	**A-3226-F-708**	
22	Bushing-bearing cage	1	**1225-V-880**	Bronze
23	Shim-brg. cage .003	4	**2203-R-3008**	
	.010	1	**2203-S-3009**	
24	Cup-front bearing	1	**29630**	
25	Cone-front bearing	1	**29675**	
26	Drive gear-inter-axle	1	**3892-P-2044**	
27	Cone-rear bearing	1	**29675**	
28	Cup-rear bearing	1	**29630**	

(1) Not serviced separately

NOTE: THREAD LOCKING LIQUID/DIFFERENTIAL CASE HALVES

When assembling differential case halves in Meritor axles, a thread locking adhesive should be used.
The recommended procedure is as follows:

1. Wipe excess oil and residue from the threaded holes in the case. The holes should be relatively oil free.
2. If new bolts are being used, a yellow coating of Dri-Loc should appear on the threads. Assemble the case with these coated bolts to the required torque.
3. If the original bolts are reused or regular bolts without Dri-Loc are used, Meritor part no. 2297-C-7049 should be used as a thread locking adhesive. Apply the adhesive to the differential case holes only. Thread the bolts and tighten to the required torque.

IMPORTANT: Do not apply Meritor part no. 2297-C-7049 to Dri-Loc coated bolts.
Refer to Meritor Maintenance Manual 1 for complete procedure.

FRONT-MOUNTED, SINGLE-REDUCTION TANDEM DRIVE UNIT (SL/SQHD REAR-REAR CARRIER 3200-C-393)

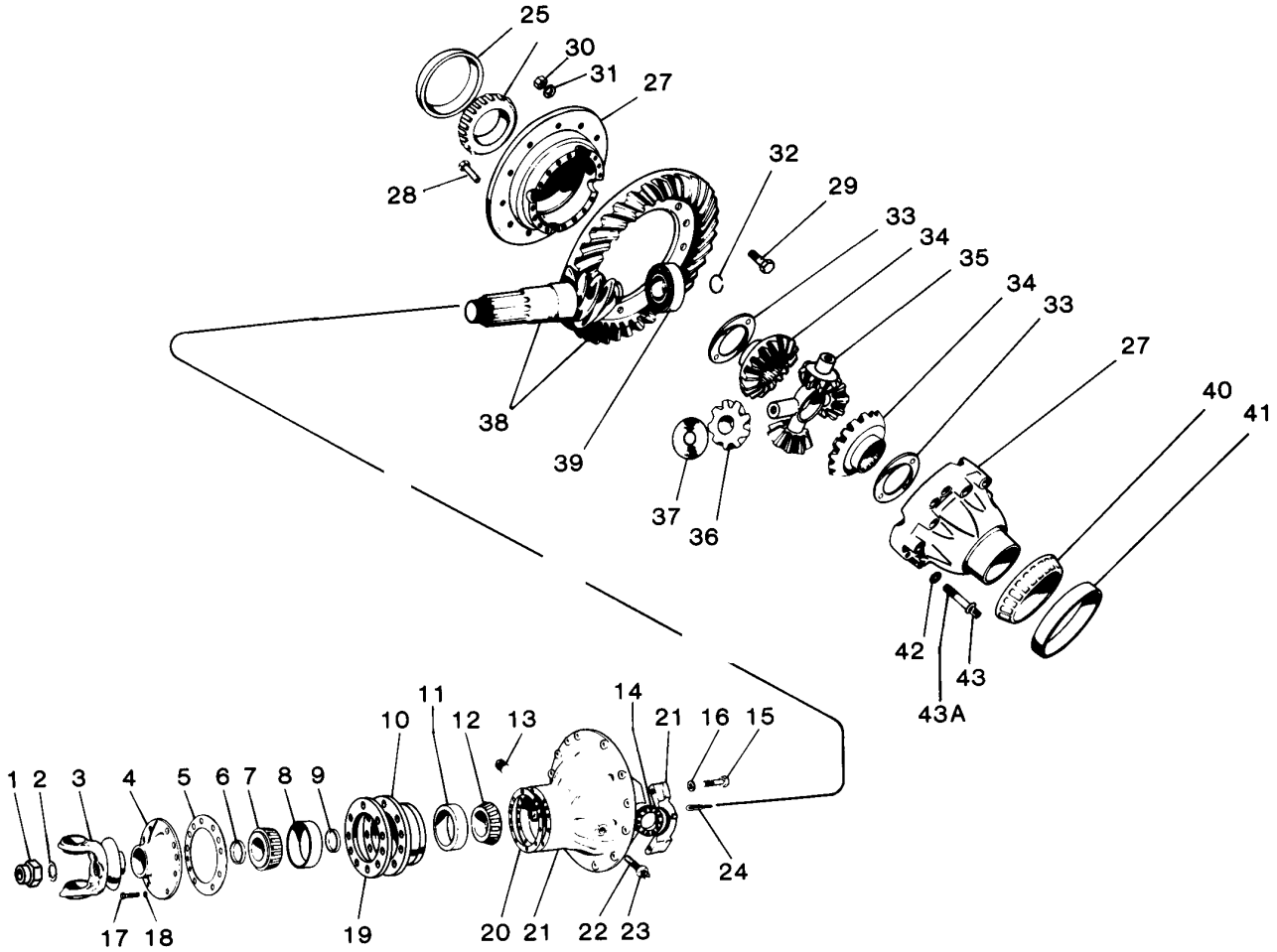

AVAILABLE REAR DIFFERENTIAL CARRIERS

AXLE MODEL	DIFFERENTIAL CARRIER ASSEMBLY PART NUMBER	DESCRIPTION	GEAR RATIOS
SLHD (3) Malleable Iron Carrier	**H84-3200-C-393**	LHR carrier, less yoke	FAST: 3.55, 3.70, 3.90, 4.11, 4.33, 4.44, 4.63
	F30-3200-C-393	LHR carrier, with A1-3280-G-2269 yoke assy.	
	H85-3200-C-393	LHR carrier, less yoke	STD.: 4.87, 5.28, 5.83, 6.17, 6.83, 7.20, 7.80, 8.60
	F29-3200-C-393	LHR carrier, with A1-3280-G-2269 yoke assy.	
SQHD (3) Malleable Iron Carrier	**H72-3200-C-393**	QHR carrier, less yoke	FAST: 3.55, 3.70, 3.90, 4.11, 4.33, 4.44, 4.63
	F28-3200-C-393	QHR carrier, with A1-3280-G-2269 yoke assy.	
	H73-3200-C-393	QHR carrier, less yoke	STD.: 4.87, 5.28, 5.83, 6.17, 6.83, 7.20, 7.80, 8.60
	F27-3200-C-393	QHR carrier, with A1-3280-G-2269 yoke assy.	

(3) For remanufactured carriers, less yoke, malleable assemblies only, order by specifying LHR plus ratio or QHR plus ratio.

SL/SQHD FAMILY

(REAR-REAR CARRIER 3200-C-393)

ITEM	DESCRIPTION	QTY	PART NO.	REMARKS
1	Nut-yoke input	1	**1227-Z-936**	
2	Washer-yoke input	1	**1229-A-2653**	
3	Companion yoke & slinger assy.	1	**See SECTION 5**	
4, 6	Cage-cover & seal assy.	1	**A-3266-H-86**	
5	Gasket-bearing cage	1	**2208-E-421**	
6	Oil seal assy.	1	**A-1805-B-80**	
7	Cone-outer bearing	1	**72188C**	
8	Cup-outer bearing	1	**72487**	
9	Spacer-bearing	As req'd.	**See KIT 592, SECTION 6**	
8, 10, 11	Bearing-cage & cup assy.	1	**A-3226-Z-78**	
11	Cup-inner bearing	1	**72487**	
12	Cone-inner bearing	1	**72200C**	
13	Plug-inspection hole	1	**P-212**	
14	Adjusting ring-differential bearing	2	**2214-G-215**	
15	Capscrew-differential	4	**S-21238-2**	Malleable carriers
	bearing cap	4	**10-X-1021 (2)**	Aluminum carriers
16	Washer-diff. bearing cap	4	**1229-V-1556**	
17	Capscrew-cage	8	**S-2813-2**	Malleable carriers
		8	**10-X-720**	Aluminum carriers
18	Washer-cage capscrew	8	**1229-C-1511**	
19	Shim .003	1	**2203-L-7448**	
	.005	3	**2203-K-7447**	
	.010	4	**2203-J-7446**	
20	Shim	As req'd.	**2203-T-8366**	Use with these ratios only: 4.88, 6.17, 6.83, 7.20, 7.80, 8.60
15, 16,	Carrier & cap assy.	1	**A2-3200-C-393**	Malleable
21 (1)			**No Longer Available**	Aluminum
22	Thrust screw	1	**15-X-1025**	
23	Nut-thrust screw	1	**13-X-41**	
24	Lock pin-adjusting ring	2	**1199-R-2176**	
25	Cup-differential bearing-L.H.	1	**493**	Standard & fast ratios
26	Cone-differential bearing-L.H.	1	**496**	Standard & fast ratios
		1	**497**	Fast ratios only
27, 33,	Differential case & nest assy.	1	**B11-3235-U-619 †**	Standard ratios
34, 35,		1	**A87-3235-V-620 †**	Fast ratios
36, 37,		1	**B5-3235-U-619 ††**	Standard ratios
42, 43		1	**A84-3235-V-620 ††**	Fast ratios
27, 42,	Differential case assy.	1	**B3-3235-U-619**	Standard ratios
43		1	**A83-3235-V-620**	Fast ratios
28	Rivet-gear to case (riveted version)	12	**RV-71013**	
29	Bolt-gear to case (bolted version)	12	**15-X-1523**	Available as KIT 570, see SECTION 6
30	Nut-gear to case	12	**NL-110-1**	
31	Washer-gear to case	12	**1229-U-1503**	
32	Lockring-drive pinion	1	**1229-A-1301**	

(1) Not serviced separately † SLHD only †† SQHD only
(2) No longer available

(REAR-REAR CARRIER 3200-C-393) Continued

ITEM	DESCRIPTION	QTY	PART NO.	REMARKS
33	Washer-side gear thrust	2	**1229-T-1034**	KIT 317 - SLHD, see SECTION 6 KIT 318 - SQHD, see SECTION 6
34	Side gear-differential	2	**2234-X-310 †**	
		2	**2234-X-700 ††**	
35	Spider-differential	1	**3278-S-305**	
36	Pinion-differential	4	**2233-U-151**	
37	Washer-pinion thrust	4	**1229-R-1032**	
38	Drive gear & pinion assy.	1	**See SECTION 4**	
39	Rear bearing-drive pinion	1	**1228-F-552**	
40	Cone-differential bearing-R.H.	1	**496**	Standard & fast ratios
41	Cup-differential bearing-R.H.	1	**493**	Standard & fast ratios
42	Washer-diff. case bolt	16	**1229-C-1511**	
43	Bolt-differential case	16	**S-2826P-1**	
43A	Thread locking liquid/diff. case	1	**2297-C-7049**	.34 oz. tube, See NOTE below

† SLHD only

†† SQHD only

NOTE: THREAD LOCKING LIQUID/DIFFERENTIAL CASE HALVES

When assembling differential case halves in Meritor axles, a thread locking adhesive should be used.
The recommended procedure is as follows:

1. Wipe excess oil and residue from the threaded holes in the case. The holes should be relatively oil free.
2. If new bolts are being used, a yellow coating of Dri-Loc should appear on the threads. Assemble the case with these coated bolts to the required torque.
3. If the original bolts are reused or regular bolts without Dri-Loc are used, Meritor part no. 2297-C-7049 should be used as a thread locking adhesive. Apply the adhesive to the differential case holes only. Thread the bolts and tighten to the required torque.

IMPORTANT: Do not apply Meritor part no. 2297-C-7049 to Dri-Loc coated bolts.
Refer to Meritor Maintenance Manual 1 for complete procedure.

SL/SQ100 FAMILY

QHP, QD-100, QP-100, LD-100, LP-100, QRD-100, QRP-100
3200-R-1032 (MALLEABLE), 3200-L-1078 (ALUMINUM)

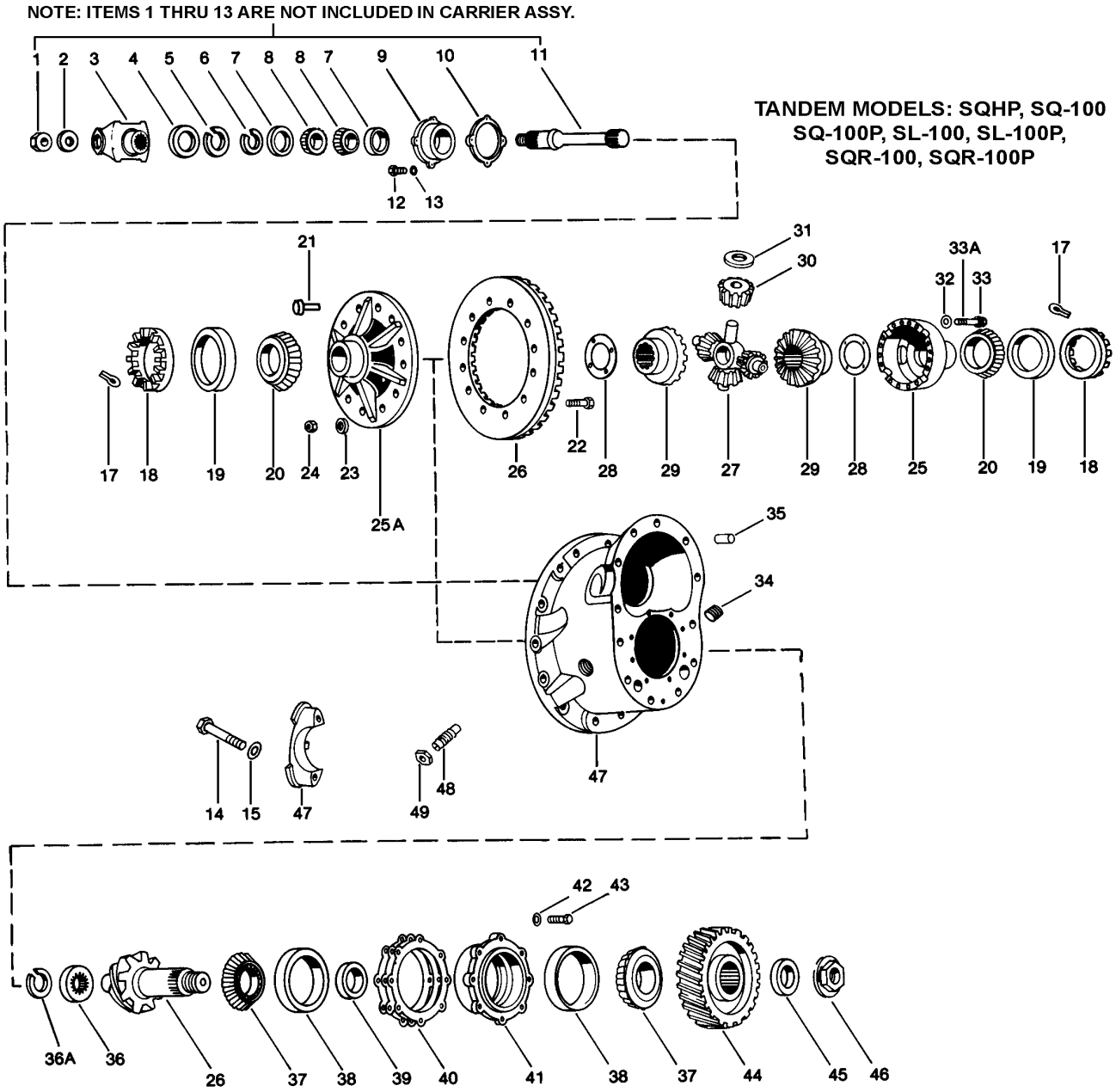

QHP, QD-100, QP-100, LD-100, LP-100, QRD-100, QRP-100
3200-R-1032 (MALLEABLE), 3200-L-1078 (ALUMINUM)

DESCRIPTION	MODEL	DIFFERENTIAL CARRIER ASSY. PART NO.	DIFF. TYPE	AXLE SPLINE	RATIOS		
					SQHP	SL/SQ-100	SQR-100
* Differential Carrier Assy. less yoke or flange. (3)	QHP & QP-100	**G71-3200-R-1032**	Std.	2.10"-41	Standard 4.88, 5.29, 6.14, 6.17, 6.83, 7.80	Standard 4.88, 5.29, 5.83, 5.86, 6.14, 6.17, 6.83, 7.20, 7.80	Standard 4.88, 5.29, 5.86
		G88-3200-R-1032	NoSpin				
		C16-3200-L-1078	Std.				
	QD-100	**G72-3200-R-1032**	Std.				
		G78-3200-R-1032	NoSpin				
		G85-3200-R-1032	Hi-Trac		Medium 4.10, 4.11, 4.33, 4.44, 4.63	Medium 4.10, 4.11, 4.33, 4.44, 4.63	Medium 4.10, 4.33, 4.44, 4.63
		C17-3200-L-1078	Std.				
		C20-3200-L-1078	Hi-Trac				
	LD-100	**G73-3200-R-1032**	Std.	2.00"-39			
		G90-3200-R-1032	NoSpin				
		C23-3200-L-1078	Std.		Fast 3.42, 3.55, 3.70, 3.73, 3.90	Fast 3.42, 3.55, 3.70, 3.73, 3.90	Fast 3.42, 3.55, 3.73, 3.90
	LP-100	**G96-3200-R-1032**	Std.				
		C29-3200-L-1078	Std.				
	QRD-100	**H10-3200-R-1032**	Std.	2.10"-41			
		H22-3200-R-1032	NoSpin				
		C28-3200-L-1078	Std.				
	QRP-100	**H8-3200-R-1032**	Std.				
		C31-3200-L-1078	Std.				

For yoke or flange see SECTION 5

* Specify ratios. When changing ratios from standard to medium or fast, you must change differential cases.

(3) For remanufactured carriers, less yoke, malleable assemblies only, order by specifying the Model number plus ratio. (QHP model not available as reman. carrier. Use QP100 as replacement.)

ITEM	DESCRIPTION	QTY.	PART NO.	REMARKS
1	Nut-thru-shaft	1	**1227-Q-901**	
2	Washer-thru shaft	1	**1229-A-2653**	(QRD/QRP, QRF)
3	Yoke-thru-shaft	1	**See SECTION 5**	
4	Oil seal assy.-thru-shaft-	1	**A-1205-V-1374**	Pre 8-83
	bearing cage		**A-1205-G-2425**	Triple lip seal
5	Snap ring-thru-shaft	As req'd.	**See KIT 530**	SECTION 6
6	Snap ring-thru-shaft	1	**1829-A-859**	
7	Cup-thru-shaft brg.	2	**LM-603011**	
8	Cone-thru-shaft brg.	2	**LM-603049**	
9, 7	Brg. cage assy.-thru-shaft	1	**A-3226-X-596**	
10	Gasket-thru-shaft brg. cage	1	**2208-C-445**	
11	Thru-shaft	1	**3280-L-9528**	
12	Capscrew- thru-shaft brg. cage	4	**15-X-387**	(QRD/QRP/QRF)
13	Washer-thru-shaft brg. cage	4	**1229-K-1597**	
14	Capscrew-diff. brg. cap	4	**S-21238-2**	
			10-X-1032 (2)	Aluminum carrier
15	Washer-diff. brg. cap	4	**1229-V-1556**	
16	Dowel pin-diff. brg. cap	2	**See Item 47**	Not shown
17	Cotter-diff. brg. adj. ring	2	**1199-R-2176**	
18	Adj. ring-diff. brg.	2	**2214-Z-208**	
19	Cup-diff. brg.	2	**JM-716610**	
20	Cone-diff. brg.	2	**JM-716649**	

(2) No longer available

SL/SQ100 FAMILY

QHP, QD-100, QP-100, LD-100, LP-100, QRD-100, QRP-100
3200-R-1032 (MALLEABLE), 3200-L-1078 (ALUMINUM) (Continued)

ITEM	DESCRIPTION		QTY.	PART NO.	REMARKS
21	Rivet-bevel gear to case (opt.)		12	**RV-71013**	
22	Bolt- Bevel gear to case	QRD, QRP, QRF	12	**15-X-1626**	Avail. in KIT 2306, see SECT.6
		QHP, QD, QP, LD, LP		**15-X-1523**	Avail. in KIT 570, see SECTION 6
23	Washer-bevel gear to case		12	**1229-U-1503**	
24	Nut-bevel gear to case		12	**NL-110-1**	
25 (1) , 25A (1) 32, 33, 33A	*Differential case assy.-main		1	**A28-3235-D-1174**	Standard ratios
				A26-3235-L-1156	Medium ratios
				A19-3235-C-1173	Fast ratios
25 (1) , 25A (1) 27, 28, 29, 30, 31, 32, 33	*Differential case and nest assy.	QHP, QD-100	1	**A18-3235-D-1174**	Standard ratios
		LD-100		**A34-3235-D-1174 (2)**	
		QRD-100		**A44-3235-D-1174**	
25 (1) , 25A (1) 27, 28, 29, 30, 31, 32, 33	*Differential case and nest assy.	QHP, QD-100	1	**A17-3235-L-1156**	Medium ratios
		LD-100		**A43-3235-L-1156 (2)**	
		QRD-100		**A51-3235-L-1156 (2)**	
25 (1) , 25A (1) 27, 28, 29, 30, 31, 32, 33	*Differential case and nest assy.	QHP, QD-100	1	**A13-3235-C-1173**	Fast ratios
		LD-100		**A33-3235-C-1173**	
		QRD-100		**A43-3235-C-1173 (2)**	
26 (1)	*Drive gear & pinion assy.		1	**See SECTION 4**	
27	Spider-diff.		1	**3278-S-305**	
28	Thrust washer-diff. side gear		2	**1229-T-1034**	
29	Side gear- main differential	QHP, QD-100	2	**2234-C-783**	2.10"-41 spline
		LD-100		**2234-D-966**	2.00"-39 spline
		QRD-100		**2234-F-1046**	2.10"-41 spline
30	Pinion-diff.	QHP, QD/LD-100	4	**2233-U-151**	
		QRD-100		**2233-J-1024**	
31	Thust washer-diff. pinion		4	**1229-R-1032**	
32	Washer-diff. case		16	**1229-C-1511**	
33	Capscrew-diff. case		16	**S-2826P-1**	
33A	Thread locking liquid/diff. case		1	**2297-C-7049**	.34 oz. tube. See NOTE on next page
34	Plug-filler		1	**P-212**	
35	Dowel-helical gear cover to cover		2	**1246-M-455**	
36	Spigot brg.-drive pinion		1	**1228-F-552**	
36A	Lock ring-drive pinion		1	**1229-A-1301**	
37	Cone-drive pinion brg.		2	**72212-C**	
38	Cup-drive pinion brg.		2	**72487**	
39	Shim spacer-drive pinion		As req'd.	**See KIT 545**	SECTION 6
40	Shim-Pinion forward brg. cage	.003	3	**2203-A-6319**	Available in KIT 1500, see SECTION 6
		.005	4	**2203-B-6320**	
		.010	1	**2203-C-6321**	
41, 38	Drive pinion cage & bearing cup assembly		1	**A-3226-R-564**	
				A-3226-U-749 (2)	Aluminum carrier
42	Washer-drive pinion brg. cage		7	**1229-C-1511**	
			8		Aluminum carrier
43	Capscrew-drive pinion brg. cage		7	**S-2812-2**	
			8	**15-X-1558 (2)**	Aluminum carrier

(1) Not serviced separately
(2) No longer available
* Specify ratios. When changing ratios from standard to medium or fast, you must change differential cases.

QHP, QD-100, QP-100, LD-100, LP-100, QRD-100, QRP-100
3200-R-1032 (MALLEABLE), 3200-L-1078 (ALUMINUM) (Continued)

ITEM	DESCRIPTION	QTY.	PART NO.	REMARKS
44	Gear-helical driven	1	**3892-S-3945**	
45	Washer-drive pinion	1	**1229-N-1730**	
46	Nut-drive pinion	1	**1227-N-898**	
47, 14,	Diff. carrier & cap assy.	1	**A2-3200-R-1032**	
15, 16	Use with KIT 533 (Silastic)		**A2-3200-L-1078**	Aluminum carrier
47A	Adhesive-brg. cup	1	**2297-T-4180 (2)**	Not shown, 2-.5 cc tubes (1 tube per bearing)
48	Screw-thrust block adj.	1	**15-X-1025**	
49	Nut-drive gear thrust block screw	1	**13-X-41**	

(2) No longer available

NOTE: THREAD LOCKING LIQUID/DIFFERENTIAL CASE HALVES

When assembling differential case halves in Meritor axles, a thread locking adhesive should be used.
The recommended procedure is as follows:

1. Wipe excess oil and residue from the threaded holes in the case. The holes should be relatively oil free.
2. If new bolts are being used, a yellow coating of Dri-Loc should appear on the threads. Assemble the case with these coated bolts to the required torque.
3. If the original bolts are reused or regular bolts without Dri-Loc are used, Meritor part no. 2297-C-7049 should be used as a thread locking adhesive. Apply the adhesive to the differential case holes only. Thread the bolts and tighten to the required torque.

IMPORTANT: Do not apply Meritor part no. 2297-C-7049 to Dri-Loc coated bolts.
Refer to Meritor Maintenance Manual 1 for complete procedure.

ADAPTER COVER ASSY. (WITH OR W/O DIFFERENTIAL INTERAXLE)

QHP, QD-100, QP-100, LD-100, LP-100, QRD-100, QRP-100
3200-R-1032 (MALLEABLE), 3200-L-1078 (ALUMINUM) (Continued)

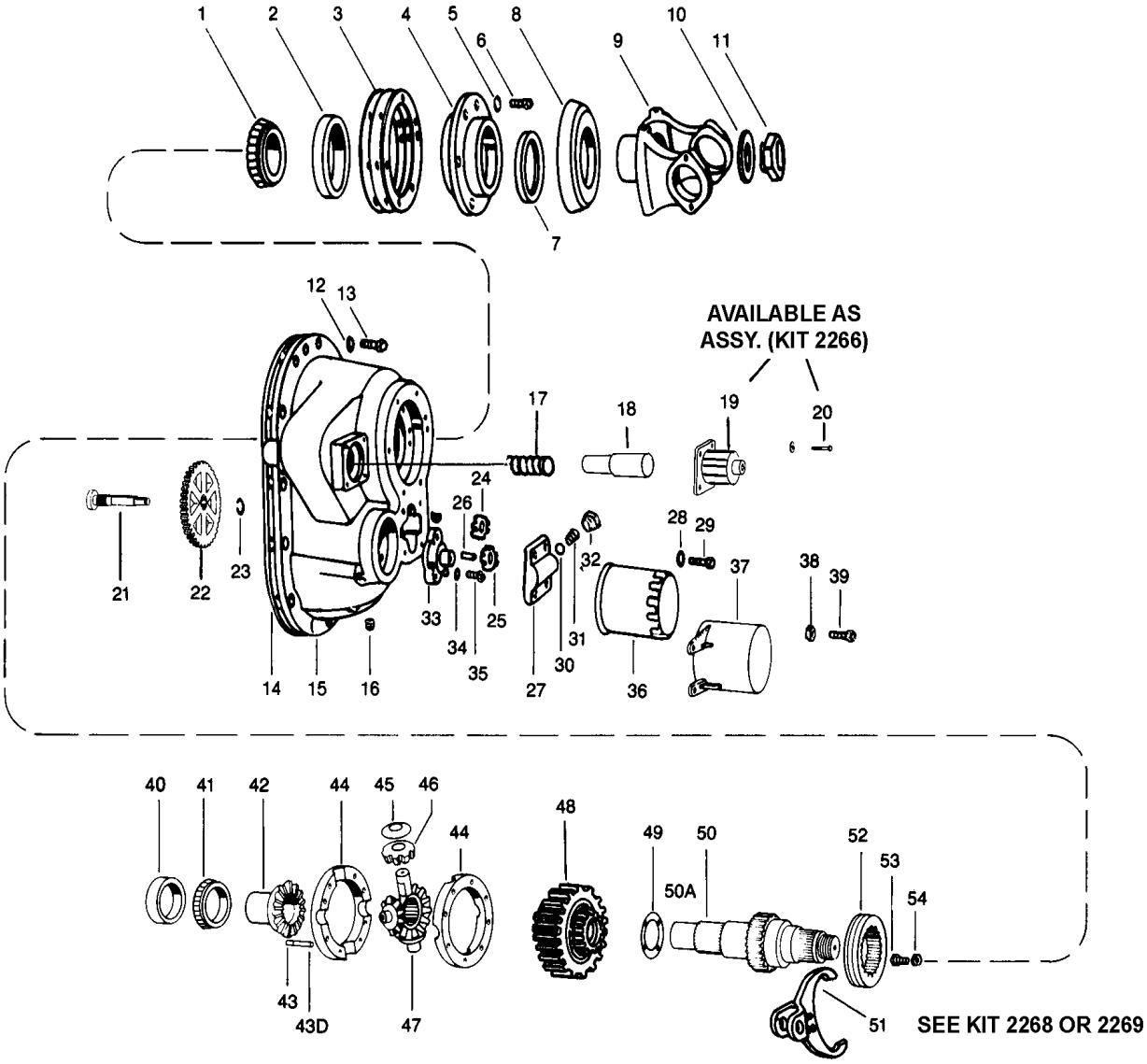

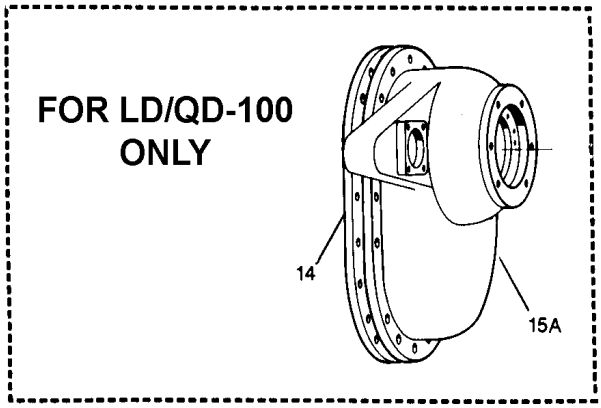

ADAPTER COVER ASSY. (WITH OR W/O DIFFERENTIAL INTERAXLE)

QHP, QD-100, QP-100, LD-100, LP-100, QRD-100, QRP-100

3200-R-1032 (MALLEABLE), 3200-L-1078 (ALUMINUM)

ITEM	DESCRIPTION	QTY.	PART NO.	REMARKS
1	Cone-input shaft brg. cage	1	**JM-511946**	
2	Cup-input shaft brg. cage	1	**JM-511910**	
3	Shim- input shaft brg. cage .003	1	**2203-R-6518**	Available in KIT 1500, see SECTION 6.
	.005		**2203-S-6519**	
	.010		**2203-T-6520**	
4, 2	Input shaft brg. cage assy.	1	**A-3226-M-585**	
5	Washer-input shaft brg. cage	6	**1229-E-1513**	
6	Capscrew-input shaft brg. cage	6	**S-2711-2**	
7	Oil seal-input shaft	1	**A-1205-E-1227**	Pre 8-83
			R945008	
8	Deflector-yoke	1	**DEFR50-4**	
9, 8	Input shaft yoke assy.	1	**See SECTION 5**	
10	Washer- input shaft	1	**1229-T-1736**	
11	Nut-input shaft	1	**1227-R-902**	
12	Washer-helical gear cover to carrier	12	**1229-C-1511**	
13	Capscrew-	12	**S-2812-2**	
	helical gear	2	**S-2812-2**	Aluminum carrier
	cover to cover	10	**15-X-1558 (2)**	
14	Gasket-helical gear cover to carrier	1	**2297-A-7021**	Silastic
15	Cover-helical gear QHP, LP/QP-100	1	**3280-U-8081**	After 8/83
			KIT 2268	Prior to 8/83
15A	Cover-helical gear LD-100, QD-100	1	**3266-H-970**	After 8/83
			KIT 2269	Prior to 8/83
15B	Tube-helical gear cover	1	**2297-V-2284 (2)**	QHP, LP/QP-100 Not shown - old style
15C	Plug-helical gear cover-welch	1	**PW-214**	Not shown - old style
16	Plug-helical cover drain	1	**P-26**	
17	Spring -push rod	1	**2258-U-411**	
18	Push rod	1	**2244-E-83**	After 8/83
			2297-X-2494	Old style. Prior to 8/83
19, 20	Air shift chamber assy.	1	**A1-3261-V-308**	Includes attaching hardware (Item no. 20) See KIT 2266, SECTION 6
20	Capscrew-air shift chamber assy.	4	**10-X-1334**	
21, 22 (1)	Shaft assy.-pump drive	1	**A1-2297-B-4240**	See KIT 1588, SECTION 6
23	Snap ring-pump shaft	1	**1229-G-2763**	Used with QHP, LP/QP-100 only.
24	Gear-pump drive	1	**3892-Z-4368**	
25	Gear-pump driven	1	**3892-A-4369**	
26	Shaft-pump idler	1	**1199-R-3346**	
27, 30, 31, 32	Relief valve pump cover assy.	1	**A-3266-P-510**	
28	Washer-pump cover	4	**1229-E-1669**	
29	Capscrew-pump cover	2	**S-256-2**	
30	Ball-relief valve	1	**1898-E-57**	
31	Spring-relief valve	1	**2258-A-521**	
32	Plug-relief valve assy. with o-ring	1	**A-1199-V-3402**	

(1) Not serviced separately
(2) No longer available

SL/SQ100 FAMILY

ADAPTER COVER ASSY. (WITH OR W/O DIFFERENTIAL INTERAXLE)

QHP, QD-100, QP-100, LD-100, LP-100, QRD-100, QRP-100
3200-R-1032 (MALLEABLE), 3200-L-1078 (ALUMINUM) (Continued)

ITEM	DESCRIPTION	QTY.	PART NO.	REMARKS
33	Adapter-filter	1	**2297-E-2293 (2)**	Used with QHP, LP/QP-100 Only.
34	Washer-filter adapter	2	**1229-E-1669**	
35	Capscrew-filter adapter	2	**S-2510-2**	
36	Filter-oil	1	**3280-V-5040**	
37	Shield-oil filter	1	**3280-V-6964**	
37A	Washer	4	**1229-E-1669**	
38	Locknut-pump shield	2	**NL-25-1**	
39	Stud-pump shield & pump cover	2	**4-X-1707**	
40	Cup-input shaft rear brg.	1	**JLM-710910**	
41	Cone-input shaft rear brg.	1	**JLM-710949C**	2234-E-1019 & JLM-710949C avail. as A-2234-E-1019 assy.
42	Differential side gear	1	**2234-E-1019**	
			MPS 3344	LD/QD-100. Prior to 12/85
			MPS 3345	QHP, LP/QP-100. Prior to 12/85
43A	Capscrew-inter-axle diff.	8	**S-2524-2**	Not shown . Available as KIT 1590, see SECTION 6.
43B	Washer-inter-axle diff.	16	**1229-E-1669**	
43C	Nut-inter-axle diff.	8	**NL-25-1**	
43D	Thread locking liquid/diff. case	1	**2297-C-7049**	.34 oz. tube. See NOTE next pg.
43A, 43B, 43C, 44, 45, 46, 47	Inter-axle diff. & nest assy 2.00"-39 spline	1	**A-3235-F-1800**	
43A, 43B, 43C, 44, 45, 46, 47	Inter-axle diff. & nest assy. 2.10"-41 spline	1	**A3-3235-F-1800**	
			MPS 3344	LD/QD-100. Prior to 12/85
			MPS 3345	QHP, LP/QP-100. Prior to 12/85
47	Spider-inter-axle diff.	1	**3278-H-372 (3)**	2.00"-39 spline
			3278-A-1093 (4)	2.10"-41 spline
48	Gear-helical drive	1	**3892-M-4927 (3)**	Use with 1014-1015 shaft
			3892-F-4738 (3)	Use with 110 shaft
			MPS 3344	LD/QD-100. Prior to 12/85
			MPS 3345	QHP, LP/QP-100. Prior to 12/85
49	Thrust washer	1	**1229-H-2764 (3)**	2.25" I.D.
			1229-M-4069 (4) (5)	2.39" I.D.
50, 50A, 10, 11	Input shaft	1	**A1-3297-A-1015**	QHP, LP/QP-100 only. 2.10"-41 spline with pump
			MPS 3345 Effective 12/85	
50, 10, 11	Input shaft	1	**A-3297-F-110 3**	LD/QD-100 only. 2.00"-39 spl.
			A1-3297-Z-1014 (4)	LD/QD-100 only. 2.10"-41 spline less pump
			MPS 3344 Effective 12/85	
50A	Ball-input shaft	1	**1228-K-37**	QHP, LP/QP-100 only - not shown. Repl. 1898-B-70

(2) No longer available
(3) Effective 3/84
(4) Effective 2/86 (welded inter-axle diff.)
(5) Not interchangeable with 1229-H-2764, effective 2/86

ADAPTER COVER ASSY. (WITH OR W/O DIFFERENTIAL INTERAXLE)

QHP, QD-100, QP-100, LD-100, LP-100, QRD-100, QRP-100
3200-R-1032 (MALLEABLE), 3200-L-1078 (ALUMINUM) (Continued)

ITEM	DESCRIPTION	QTY.	PART NO.	REMARKS
51	Shift fork	1	**A-3296-T-150**	After 8/83
			3296-E-57 (6)	Old style. Prior to 8/83
			KIT 2268	QHP, LP/QP-100. Prior to 8/83
			KIT 2269	LD/QD-100. Prior to 8/83
52	Clutch collar-input shaft	1	**3280-G-5519**	
53	Stop screw-push rod	1	**S-1812-2**	
54	Locknut-stop screw	1	**NUJA8-20-6**	

(6) Contact Specifications for replacement information (888-725-9355)

NOTE: THREAD LOCKING LIQUID/DIFFERENTIAL CASE HALVES

When assembling differential case halves in Meritor axles, a thread locking adhesive should be used.
The recommended procedure is as follows:

1. Wipe excess oil and residue from the threaded holes in the case. The holes should be relatively oil free.
2. If new bolts are being used, a yellow coating of Dri-Loc should appear on the threads. Assemble the case with these coated bolts to the required torque.
3. If the original bolts are reused or regular bolts without Dri-Loc are used, Meritor part no. 2297-C-7049 should be used as a thread locking adhesive. Apply the adhesive to the differential case holes only. Thread the bolts and tighten to the required torque.

IMPORTANT: Do not apply Meritor part no. 2297-C-7049 to Dri-Loc coated bolts.
Refer to Meritor Maintenance Manual 1 for complete procedure.

SL/SQ100 FAMILY

QAR
3200-Y-1039 (MALLEABLE)

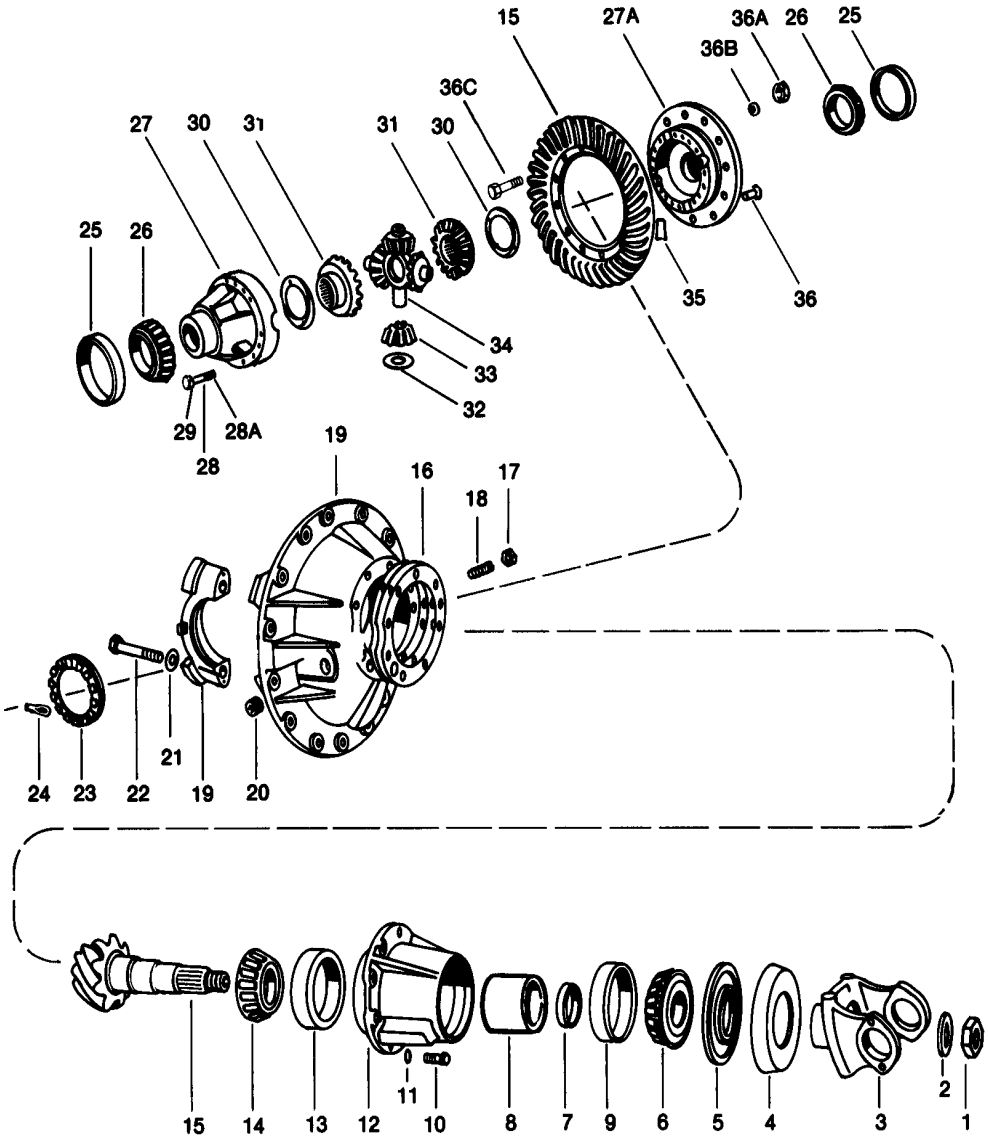

REAR DIFFERENTIAL CARRIER ASSEMBLY

TANDEM MODEL:
SQHP

DESCRIPTION	MODEL	DIFFERENTIAL CARRIER ASSY. PART NUMBER	DIFF. TYPE	AXLE SPLINE	RATIOS		
					STD.	MED.	FAST
*Differential carrier assy. less yoke or flange. (3)	QAR	**C5-3200-Y-1039**	Std.	2.10" - 41	4.88, 5.29, 6.14, 6.17, 6.83, 7.80	4.10, 4.11, 4.33, 4.44, 4.63	3.42, 3.55, 3.70, 3.73, 3.90
		C10-3200-Y-1039	NoSpin				
		B5-3200-N-1080 (Aluminum)	Std.				

For yoke or flange see SECTION 5.

* Specify ratios. When changing ratios from standard to medium or fast, you must change differential cases.

(3) For remanufactured carriers, less yoke, malleable assemblies only, order by specifying QAR plus ratio.

QAR
3200-Y-1039 (MALLEABLE)

ITEM	DESCRIPTION	QTY.	PART NO.	REMARKS
1	Nut-drive pinion	1	**1227-R-902**	
2	Washer-drive pinion	1	**1229-F-2918**	
3, 4	Yoke/flange-input	1	**See SECTION 5**	
4	Deflector-yoke input	1	**DEFR50-7**	
5	Oil seal-yoke flange	1	**A-1205-U-1685**	Pre 8-83
			R945009	
6	Cone-outer brg.	1	**72225C**	
7	Spacer-pinion brg.	As req'd.	**See KIT 1399**	SECTION 4
8	Sleeve-pinion brg.	1	**1244-F-1592**	
9	Cup-outer bearing	1	**72487**	
10	Capscrew-brg. cage	8	**S-2812-2**	
			15-X-1558 (2)	Aluminum carrier
11	Washer-brg. cage	8	**1229-C-1511**	
12, 13	Drive pinion cage & cup assy.	1	**A-3226-W-569**	
13	Cup-inner bearing	1	**65500**	
14	Cone-inner bearing	1	**65237**	
15 (1)	*Drive gear & pinion assy.	1	**See SECTION 4**	
16	Shim-pinion .003	1	**2203-C-8115**	Available as KIT 1568.
	bearing cage .005	3	**2203-D-8116**	See SECTION 6
	.010	4	**2203-E-8117**	
17	Nut-thrust block adj. screw	1	**13-X-41**	
18	Adj. screw-thrust block	1	**10-X-382**	
19, 20	Differential carrier & cap assy.	1	**A2-3200-Y-1039**	
21	Use with KIT 533 (silastic)		**A2-3200-N-1080**	Aluminum carrier
19A	Adhesive-bearing cup	1	**2297-T-4180 (2)**	Not shown, 2-.5 cc tubes
20	Plug-filler	1	**P-212**	
21	Washer-diff. brg. cap	4	**1229-V-1556**	
22	Capscrew-diff. brg. cap	4	**S-21238-2**	
			10-X-1023 (2)	Aluminum carrier
23	Adj. ring-diff. brg.	2	**2214-Z-208**	
24	Cotter-diff. brg. adj. ring	2	**1199-R-2176**	
25	Cup-diff. brg.	2	**JM-716610**	
26	Cone-diff. brg.	2	**JM-716649**	
27 (1), 27A (1),	*Differential case assembly		**A28-3235-D-1174**	Standard ratios
28, 29		1	**A26-3235-L-1156**	Medium ratios
			A19-3235-C-1173	Fast ratios
27 (1), 27A (1),			**A18-3235-D-1174**	Standard ratios
28, 29, 30, 31,	*Diff. case & nest assy.	1	**A17-3235-L1156**	Medium ratios
32, 33, 34			**A13-3235-C-1173**	Fast ratios
28	Capscrew-diff. case	16	**S-2826P-1**	Available in KIT 2467, SECT. 6
28A	Thread locking liquid/diff. case	1	**2297-C-7049**	.34 oz. tube, see NOTE, next pg.
29	Washer-diff. case	16	**1229-C-1511**	
30	Thrust washer-side gear	2	**1229-T-1034**	
31	Side gear-diff.	2	**2234-C-783**	
32	Thrust washer-diff. pinion	4	**1229-R-1032**	
33	Pinion-diff.	4	**2233-U-151**	
34	Spider-diff.	1	**3278-S-305**	

(1) Not serviced separately
(2) No longer available
* Specify ratios. When changing ratios from standard to medium or fast, you must change differential cases.

SL/SQ100 FAMILY

QAR
3200-Y-1039 (MALLEABLE)

ITEM	DESCRIPTION	QTY.	PART NO.	REMARKS
35	Thrust block-drive gear	1	**2297-Q-563 (6)**	
36	Rivet-gear to case	12	**RV-71013**	
36A	Bolt-gear to case	12	**15-X-1523**	Available as KIT 570.
36B	Washer-gear to case	12	**1229-U-1503**	See SECTION 6.
36C	Nut-gear to case	12	**NL-110-1**	

(6) Contact Specifications for replacement information (888-725-9355)

NOTE: THREAD LOCKING LIQUID/DIFFERENTIAL CASE HALVES

When assembling differential case halves in Meritor axles, a thread locking adhesive should be used.
The recommended procedure is as follows:

1. Wipe excess oil and residue from the threaded holes in the case. The holes should be relatively oil free.
2. If new bolts are being used, a yellow coating of Dri-Loc should appear on the threads. Assemble the case with these coated bolts to the required torque.
3. If the original bolts are reused or regular bolts without Dri-Loc are used, Meritor part no. 2297-C-7049 should be used as a thread locking adhesive. Apply the adhesive to the differential case holes only. Thread the bolts and tighten to the required torque.

IMPORTANT: Do not apply Meritor part no. 2297-C-7049 to Dri-Loc coated bolts.
Refer to Meritor Maintenance Manual 1 for complete procedure.

LR/QR-100
3200-N-1314 (MALLEABLE), 3200-T-1346 (ALUMINUM)

REAR-REAR DIFFERENTIAL CARRIER ASSEMBLY

TANDEM MODELS:
SQ-100, SQ-100P, SL-100, SL-100P, SQR-100, SQR-100P

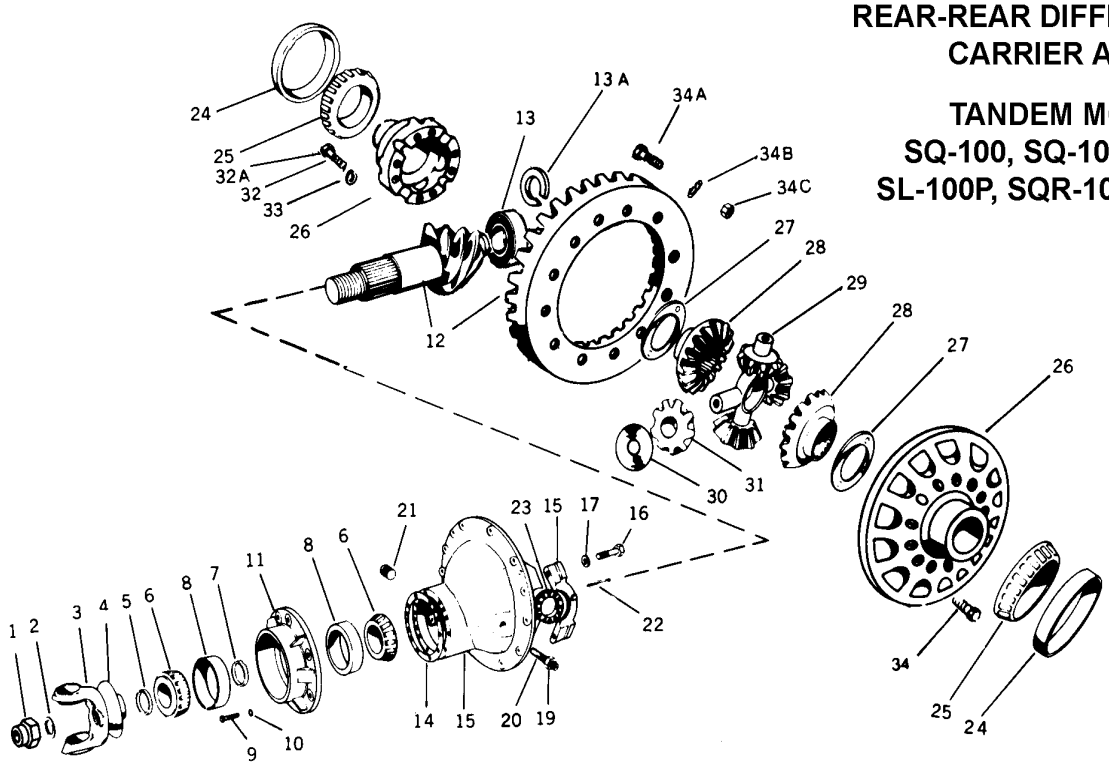

DESCRIPTION	MODEL	DIFFERENTIAL CARRIER ASSY. PART NO.	DIFF. TYPE	AXLE SPLINE	RATIOS SQHP	RATIOS SL/SQ-100	RATIOS SQR-100
*Differential carrier assy. less yoke or flange. (3)	QR-100	B51-3200-N-1314	Std.	2.10"-41	Standard 4.88, 5.29, 6.14, 6.17, 6.83, 7.80	Standard 4.88, 5.29, 5.83, 5.86, 6.14, 6.17, 6.83, 7.20, 7.80	Standard 4.88, 5.29, 5.86
		B16-3200-N-1314	NoSpin				
		B24-3200-N-1314	Hi-Trac				
		A56-3200-T-1346	Std.				
		A58-3200-T-1346	Hi-Trac				
	LR-100	B11-3200-N-1314	Std.	2.00"-39	Medium 4.10, 4.11, 4.33, 4.44, 4.63	Medium 4.10, 4.11, 4.33, 4.44, 4.63	Medium 4.10, 4.33, 4.44, 4.63
		B22-3200-N-1314	NoSpin				
		A61-3200-T-1346	Std.				
	QRR-100	B56-3200-N-1314	Std.	2.10"-41	Fast 3.42, 3.55, 3.70, 3.73, 3.90	Fast 3.42, 3.55, 3.70, 3.73, 3.90	Fast 3.42, 3.55, 3.73, 3.90
		B62-3200-N-1314	NoSpin				
		A63-3200-T-1346	Std.				

For yoke or flange see SECTION 5.

* Specify ratios. When changing ratios from standard to medium or fast, you must change differential cases.

(3) For remanufactured carriers, less yoke, malleable assemblies only, order by specifying the Model number plus ratio.

SL/SQ100 FAMILY

LR/QR-100

3200-N-1314 (MALLEABLE), 3200-T-1346 (ALUMINUM)

ITEM	DESCRIPTION		QTY.	PART NO.	REMARKS
1	Nut-yoke input		1	**1227-R-902**	
2	Washer-yoke input		1	**1229-T-1736**	
3, 4	Companion yoke & slinger assembly		1	**See SECTION 5**	
4	Deflector-yoke input		1	**2297-N-3888**	
5	Oil seal assembly		1	**A-1205-U-1685**	Pre 8-83
				R945009	
6	Cone-inner & outer bearing input		2	**72212C**	
7	Spacer-bearing cone		As req'd.	**See KIT 545**	SECTION 6
8	Cup-inner & outer bearing input		2	**72487**	
9	Capscrew-forward bearing cage		8	**S-2812-2**	
10	Washer-forward bearing cup		8	**1229-C-1511**	
11, 8	Bearing cup & cage assy.		1	**A-3226-Z-806**	
12 (1)	*Drive gear & pinion assembly		1	**See SECTION 4**	
13	Bearing-spigot drive pinion		1	**1228-F-552**	
13A	Lock ring-drive pinion		1	**1229-A-1301**	
14	Shim-forward bearing cage	.003	As req'd.	**2203-C-8115**	
		.005		**2203-D-8116**	
		.010		**2203-E-8117**	
15, 15A, 16, 17, 18	Differential carrier & cap assy. Use with KIT 533 (Silastic)		1	**A2-3200-N-1314**	
				A2-3200-T-1346	Aluminum carrier
15A	Adhesive-bearing cup		1	**2297-T-4180 (2)**	Not shown, 2-.5 cc tubes
16	Capscrew-differential brg. cap		4	**S-21238-2**	
17	Washer-differential brg. cap		4	**1229-V-1556**	
18 (1)	Dowel-differential brg. cap		2	**See Item 15**	Not shown
19	Locknut-thrust screw		1	**13-X-41**	
20	Screw-thrust drive gear		1	**15-X-1025**	
21	Plug-oil fill & inspection		1	**P-212**	
22	Cotter pin-adjusting ring		2	**1199-R-2176**	
23	Adjusting ring-differential bearing		2	**2214-Z-208**	
24	Cup-bearing differential		2	**JM-716610**	
25	Cone-bearing differential		2	**JM-716649**	
26 (1), 26A (1), 26, 28, 29, 30, 31, 32, 33	*Differential case & nest assy.	QR-100	1	**A18-3235-D-1174**	Standard Ratios
		LR-100		**A34-3235-D-1174 (2)**	
		QRR-100		**A44-3235-D-1174**	
26 (1), 26A (1), 32, 33	*Differential case assy.		1	**A28-3235-D-1174**	
26 (1), 26A (1), 26, 28, 29, 30, 31, 32, 33	*Differential case & nest assy.	QR-100	1	**A17-3235-L-1156**	Medium Ratios
		LR-100		**A43-3235-L-1156 (2)**	
		QRR-100		**A51-3235-L-1156 (2)**	
26 (1), 26A (1), 32, 33	*Differential case assy.		1	**A26-3235-L-1156**	
26 (1), 26A (1), 26, 28, 29, 30, 31, 32, 33	*Differential case & nest assy.	QR-100	1	**A13-3235-C-1173**	Fast Ratios
		LR-100		**A33-3235-C-1173**	
		QRR-100		**A43-3235-C-1173 (2)**	
26 (1), 26A (1), 32, 33	*Differential case assy.		1	**A19-3235-C-1173**	
27	Washer-thrust-side gear		2	**1229-T-1034**	

(1) Not serviced separately
(2) No longer available
* Specify ratios. When changing ratios from standard to medium or fast, you must change differential cases.

LR/QR-100
3200-N-1314 (MALLEABLE), 3200-T-1346 (ALUMINUM) (Continued)

ITEM	DESCRIPTION		QTY.	PART NO.	REMARKS
28	Side gear-diff.	QR-100	2	**2234-C-783**	2.10"-41 spline
		LR-100		**2234-D-966**	2.00"-39 spline
		QRR-100		**2234-F-1046**	2.10"-41 spline
29	Spider-differential		1	**3278-S-305**	
30	Washer-thrust differential pinion		4	**1229-R-1032**	
31	Pinion-differential	QR/LR-100	4	**2233-U-151**	
		QRR-100	4	**2233-J-1024**	
32	Capscrew-diff. case		16	**S-2826P-1**	Available in KIT 2467, SECT. 6
32A	Thread locking liquid/differential case		1	**2297-C-7049**	.34 oz. tube, see NOTE below
33	Washer-differential case		16	**1229-C-1511**	
34	Rivet-diff.case to gear (opt.)		12	**RV-71013**	
34A	Bolt-differential case to gear	QR-100, LR-100	12	**15-X-1523**	Available as KIT 570. (SQR use KIT 2306) See SECTION 6.
		QRR-100		**15-X-1626**	
34B	Washer-differential case to gear		12	**1229-U-1503**	
34C	Nut-differential case to gear		12	**NL-110-1**	

NOTE: THREAD LOCKING LIQUID/DIFFERENTIAL CASE HALVES

When assembling differential case halves in Meritor axles, a thread locking adhesive should be used.
The recommended procedure is as follows:

1. Wipe excess oil and residue from the threaded holes in the case. The holes should be relatively oil free.
2. If new bolts are being used, a yellow coating of Dri-Loc should appear on the threads. Assemble the case with these coated bolts to the required torque.
3. If the original bolts are reused or regular bolts without Dri-Loc are used, Meritor part no. 2297-C-7049 should be used as a thread locking adhesive. Apply the adhesive to the differential case holes only. Thread the bolts and tighten to the required torque.

IMPORTANT: Do not apply Meritor part no. 2297-C-7049 to Dri-Loc coated bolts.
Refer to Meritor Maintenance Manual 1 for complete procedure.

SSHD FAMILY

SHD, THD, UHD

3200-M-585, 3200-R-1162, 3200-P-1420

(BASE CARRIER PART NUMBERS)

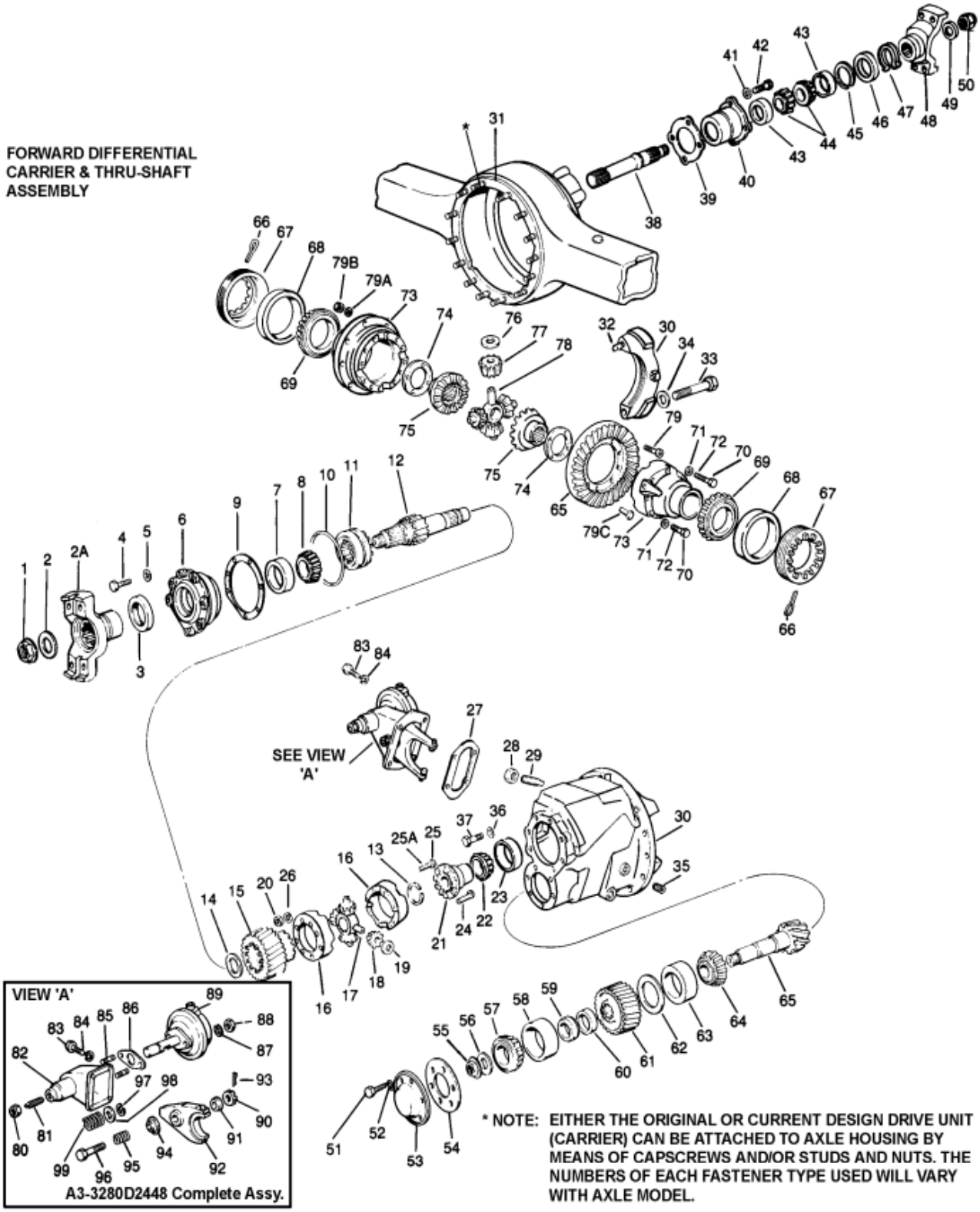

* NOTE: EITHER THE ORIGINAL OR CURRENT DESIGN DRIVE UNIT (CARRIER) CAN BE ATTACHED TO AXLE HOUSING BY MEANS OF CAPSCREWS AND/OR STUDS AND NUTS. THE NUMBERS OF EACH FASTENER TYPE USED WILL VARY WITH AXLE MODEL.

SHD, THD, UHD
AVAILABLE DIFFERENTIAL CARRIERS

DIFFERENTIAL CARRIER ASSEMBLY PART NO.	DESCRIPTION	RATIO *	REMARKS
B31-3200-P-1420	Diff. carrier assy., std. diff., 2-1/4"-23 diff. spline, less yoke	FAST: 3.73, 3.90, 3.91, 4.10, 4.11, 4.30, 4.33, 4.56, 4.63	For remanufactured carriers, less yoke, order by specifying SHDA plus ratio for 2-3/8"-24 spline or SHDB plus ratio for 2-1/4"-23 spline
A89-3200-P-1420	Diff. carrier assy., high traction diff., 2-1/4"-23 diff. spline, less yoke	STD: 4.89, 5.29, 5.38, 5.57, 6.14, 6.17, 6.83, 7.33, 7.40	
B19-3200-P-1420	Diff. carrier assy., std. diff., 2-3/8"-24 diff. spline, less yoke	STD: 4.89, 5.29, 5.38, 5.57, 6.14, 6.17, 6.83, 7.33, 7.40	
B26-3200-P-1420	Diff. carrier assy., NoSpin diff., 2-3/8"-24 diff. spline, less yoke	FAST: 3.73, 3.90, 3.91, 4.10, 4.11, 4.30, 4.33, 4.56, 4.63	

* Specify ratios. When changing ratios from standard to fast, you must change differential cases.

3200-M-585, 3200-R-1162, 3200-P-1420

ITEM	DESCRIPTION	QTY.	CARRIER 3200-M-585 PART NUMBER DATE 1/74	CARRIER 3200-R-1162 PART NUMBER DATE 1/76	CARRIER 3200-P-1420 PART NUMBER DATE 1/83	REMARKS
1	Nut-input shaft	1	**1227-D-940**	**1227-D-940**	**1227-D-940**	
2	Washer-input shaft nut	1		**1229-S-1605**	**1229-S-1605**	
2A	Yoke/flange-input shaft	1	**See SECTION 5**	**See SECTION 5**	**See SECTION 5**	
3	Oil seal-input shaft bearing cage	1	**A-1805-F-162**	**R945007**	**A-1205-J-2428**	
4	Capscrew-input shaft brg. case	7	**S-2712-2**	**S-2712-2**	**S-2712-2**	
5	Washer-input shaft bearing cage	7	**1229-E-1513**	**1229-E-1513**	**1229-E-1513**	
6, 7	Brg. cage assy.-input shaft	7	**3226-M-351 (2)**	**KIT 2427 See SECTION 6**	**KIT 2427 See SECTION 6**	
7	Brg. cup-input shaft bearing cage	1	**1228-P-458 (2) (Ball bearing assy.)**	**JH-211710**	**JH-211710**	
8	Brg. cone-input shaft bearing cage	1		**JH-211749**	**JH-211749**	
9	Shim-input brg. cage .003	3	**2203-G-4089**	**2203-Q-6803**	**2203-Q-6803**	
	.005	2	**2203-H-4090**	**2203-R-6804**	**2203-R-6804**	
	.010	1		**2203-S-6805**	**2203-S-6805**	
10	O-ring-input shaft brg.	1	**5-X-591**	**5-X-591**	**5-X-591**	
11	Clutch collar	1	**MPS 2259**	**KIT 2427**	**KIT 2427**	For KIT details, see SECTION 6
1, 12, 13	Input shaft assy.	1	**A1-3280-S-5609**	**KIT 2498**	**KIT 2498**	
13	Retainer-input shaft (snap ring)	1	**1229-R-1604 (3)**	**1229-V-2570 (3)**	**1229-V-2570 (3)**	Used before 7/24/89
		1	**1229-L-4354 (4)**	**1229-L-4354 (4)**	**1229-L-4354 (4)**	Used after 7/24/89
14	Thrust washer-input shaft gear	1	**1229-M-2769**	**1229-M-2769**	**1229-M-2769**	
15	Gear-input drive	1	**3892-F-1826**	**3892-F-1826**	**3892-F-1826**	

(2) No longer available
(3) 1229-R-1604 & 1229-V-2570 are required for square cut groove.
(4) 1229-L-4354 is required for round cut groove.

SSHD FAMILY

SHD, THD, UHD
3200-M-585, 3200-R-1162, 3200-P-1420

ITEM	DESCRIPTION	QTY.	CARRIER 3200-M-585 PART NUMBER DATE 1/74	CARRIER 3200-R-1162 PART NUMBER DATE 1/76	CARRIER 3200-P-1420 PART NUMBER DATE 1/83	REMARKS
16(1), 20, 25, 26	Case assy.,-inter-axle diff.	1	**A-3235-W-751**	**A1-3235-G-1801**	**A1-3235-G-1801**	
16(1) thru 19, 20, 25, 26	Case & nest assy.-inter-axle diff.	1	**Must purchase A-3235-W-751 & Items 17, 18, 19, 20, & 21A separately**	**A2-3235-F-1800**	**A2-3235-F-1800**	
17	Spider-inter-axle diff.	1	**3278-Y-129**	**3278-V-1088**	**3278-V-1088**	
18	Pinion-inter-axle diff.	4	**2233-W-153**	**2233-W-153**	**2233-W-153**	
19	Thrust washer-inter-axle diff. pinion	4	**1229-T-1606**	**1229-T-1606**	**1229-T-1606**	
20	Nut-inter-axle diff. case bolt	8		**NL-27-1**	**NL-27-1**	See KIT 389, SECTION 6
21	Side gear-inter-axle diff.	1	**2234-F-604**	**2234-M-793**	**2234-M-793**	
21A	Washer-side gear-inter-axle diff.	1	**1229-N-1600**			Not shown
22	Brg. cone-inter-axle diff. rear	1	**A-1228-N-326 (Ball bearing assy.)**	**JLM-714149**	**JLM-714149**	
23	Brg. cup-inter-axle diff. rear	1		**JLM-714110**	**JLM-714110**	
24	Rivet-inter-axle diff. case	8		**17-X-234 (2)**	**17-X-234 (2)**	
25	Bolt-inter-axle diff. case	8	**S-2722A-1**	**S-2726-2 ***	**S-2726-2 ***	*See KIT 389, SECTION 6
25A	Thread locking liquid/ diff. case	1	**2297-C-7049 .34 oz. tube**	**2297-C-7049 .34 oz. tube**	**2297-C-7049 .34 oz. tube**	See NOTE following parts listing.
26	Washer-inter-axle diff. case bolt	16	**1229-E-1513**	**1229-E-1513**	**1229-E-1513**	See KIT 389, SECTION 6
27	Gasket-shift hsg.	1	**2208-G-501**	**2208-G-501**	**2208-G-501**	
28	Nut	1	**13-X-41**	**13-X-41**	**13-X-41**	
29	Screw-thrust	1	**15-X-1025**	**15-X-1025**	**15-X-1025**	
30(1), 33, 32(1), 34	Carrier & cap assy.	1	**MPS 2255 (2)**	**A2-3200-P-1420**	**A2-3200-P-1420**	
31	Gasket-carrier to hsg. (Silastic)	3 oz.	**2297-A-7021**	**2297-A-7021**	**2297-A-7021**	
32 (1)	Dowel-bearing cap	4	**1898-Z-1066**	**1898-Z-1066**	**1898-Z-1066**	
33	Capscrew-diff. brg. cap	4	**S-21444-2**	**S-21444-2**	**S-21444-2**	
34	Washer-diff. brg. cap	4	**1229-T-1554**	**1229-T-1554**	**1229-M-1625**	
35	Plug-filler	1	**P-212**	**P-212**	**1250-E-473**	
36	Washer-carrier to housing	14		**1229-U-1503**	**1229-U-1503**	
37	Capscrew-carrier to housing	8		**10-X-1594**	**10-X-1594**	
		2		**S-21022-2**	**S-21022-2**	

(1) Not serviced separately
(2) No longer available

SHD, THD, UHD
3200-M-585, 3200-R-1162, 3200-P-1420

ITEM	DESCRIPTION	QTY.	CARRIER 3200-M-585 PART NUMBER DATE 1/74	CARRIER 3200-R-1162 PART NUMBER DATE 1/76	CARRIER 3200-P-1420 PART NUMBER DATE 1/83	REMARKS
38	Thru-shaft	1	A-3280-Z-2444 (Includes Item 50)	3280-L-6720	3280-L-6720	
39	Gasket-thru-shaft brg. cage	1	2208-C-445	2208-C-445	2208-C-445	
40 (1), 43	Cage assy.-thru-shaft bearing	1	A-3226-X-180	A-3226-W-699	A-3226-W-699	
41	Washer-thru-shaft brg. cage	4	1229-K-1597	1229-U-1503	1229-K-1597	
42	Capscrew-thru-shaft brg. cage	4	S-268-2	S-268-2	S-268-2	
43	Brg. cup-thru-shaft inner & outer	2	1228-J-192 (Ball brg. assy.)	JLM-104910	JLM-104910	
44	Brg. cone-thru-shaft	2		LM-104949	LM-104949	
45	Snapring-thru-shaft	1	1229-L-1598	See KIT 576, SECTION 6	See KIT 576, SECTION 6	
46	Oil seal-thru-shaft brg. cage	1	A-1805-D-212	A-1805-D-212	A-1205-A-1925	
47	Thrust washer-thru-shaft brg.	1		1229-C-2057	1229-C-2057	
48	Yoke/flange-thru-shaft	1	See SECTION 5	See SECTION 5	See SECTION 5	
49	Washer-thru-shaft rear yoke	1		1229-T-1736	1229-T-1736	
50	Nut-thru-shaft rear yoke	1	1227-A-937	1227-J-946	1227-J-946	
51	Capscrew-drive pinion brg. cover	6	S-266-1	S-266-1	S-266-1	
52	Washer-drive pinion brg. cover	6	1229-C-1017	1229-C-1017	1229-C-1017	
53	Cover-dr. pinion brg.	1	3262-H-112	3262-H-112	3262-H-112	
54	Gasket-drive pinion brg. cover	1	2208-F-500	2208-F-500	2208-F-500	
55	Nut-dr. pinion shaft	1	1227-D-940	1227-D-940	1227-D-940	
56	Washer-drive pinion shaft	1	1229-S-1605	1229-S-1605	1229-S-1605	
57	Brg. cone-drive pinion outer	1	65237	65237	65237	
58	Brg. cup-drive pinion outer	1	65500	65500	65500	
59	Spacer-drop gear box	1	1244-G-787	1244-G-787	1244-G-787	
60	Spacer-pinion brg.	As Reqd	See KIT 521, SECTION 6	See KIT 521, SECTION 6	See KIT 521, SECTION 6	
61	Gear-driven drop box	1	3892-D-1798	3892-D-1798	3892-D-1798	
62	Shim-drive pinion brg. .003	4	2203-F-2788	2203-F-2788	2203-F-2788	
	.005	2	2203-G-2789	2203-G-2789	2203-G-2789	
	.010	4	2203-H-2790	2203-H-2790	2203-H-2790	

(1) Not serviced separately

SSHD FAMILY

SHD, THD, UHD
3200-M-585, 3200-R-1162, 3200-P-1420

ITEM	DESCRIPTION	QTY.	CARRIER 3200-M-585 PART NUMBER DATE 1/74	CARRIER 3200-R-1162 PART NUMBER DATE 1/76	CARRIER 3200-P-1420 PART NUMBER DATE 1/83	REMARKS
63	Brg. cup-drive pinion inner	1	**H-715311**	**H-715311**	**H-715311**	
64	Brg. cone-drive pinion outer	1	**H-715343**	**H-715343**	**H-715343**	
65 (1)	Drive gear & pinion assy.	1	**See SECTION 4**	**See SECTION 4**	**See SECTION 4**	
66	Cotter-diff. brg. adj. ring	2	**1199-M-2457**	**1199-M-2457**	**1199-M-2457**	
67	Adj. ring-diff. brg.	2	**2214-X-50**	**2214-X-50**	**2214-X-50**	
68	Brg. cup-diff.	2	**47820**	**47820**	**47820**	
69	Brg. cone-diff.	2	**47890**	**47890**	**47890**	
70	Capscrew- short	4	**S-21020A-2**	**S-21020A-2**	**S-21020A-2**	
	diff. case long	8	**S-21028A-2**	**S-21028A-2**	**S-21028A-2**	
71	Washer-diff. case capscrew	12	**1229-U-1503**	**1229-U-1503**	**1229-U-1503**	
72	Thread locking liquid/ diff. case	1	**2297-C-7049 .34 oz. tube**	**2297-C-7049 .34 oz. tube**	**2297-C-7049 .34 oz. tube**	See NOTE following parts listing.
73(1), 70, 71, 72	Diff. case assy.- main	1	**A32-3235-N-1106**	**A32-3235-N-1106**	**A-3235-N-1678**	Standard ratio
		1	**A39-3235-Q-1109**	**A39-3235-Q-1109**	**A-3235-Q-1681**	Fast ratio
70 thru 78	Diff. case & nest assy.-main (for axle using 2-1/4"-23 spline)	1	**A4-3235-N-1106**	**A4-3235-N-1106**	**A3-3235-N-1678**	Standard ratio
		1	**A6-3235-Q-1109**	**A6-3235-Q-1109**	**A3-3235-Q-1681**	Fast ratio
70 thru 78	Diff. case & nest assy.-main (for axle using 2-3/8"-24 spline)	1	**A1-3235-N-1106**	**A1-3235-N-1106**	**A1-3235-N-1678**	Standard ratio
		1	**A1-3235-Q-1109**	**A1-3235-Q-1109**	**A1-3235-Q-1681**	Fast ratio
74	Thrust washer-diff. side gear	2	**1229-E-993**	**1229-E-993**	**1229-E-993**	
75	Side gear- 23 Spl.	2	**2234-K-271**	**2234-K-271**	**2234-K-271**	NoSpin A3230-V-22(2)
	main diff. 24 Spl.	2	**2234-F-344**	**2234-F-344**	**2234-F-344**	NoSpin A3230-W-23
76	Thrust washer- diff. pinion	4	**1229-D-992**	**1229-D-992**	**1229-D-992**	
77	Pinion-diff.	4	**2233-U-99**	**2233-U-99**	**2233-U-99**	
78	Spider-diff.	1	**3278-A-79**	**3278-A-79**	**3278-A-79**	
79	Capscrew	12	**15-X-1707**	**15-X-1707**	**15-X-1707**	
79A	Washer-gear to case	12	**1229-U-1503**	**1229-U-1503**	**1229-U-1503**	
79B	Nut-gear to case	12	**NL-110-1**	**NL-110-1**	**NL-110-1**	
79C	Rivet-bevel gear to case	12	**RV-71016**	**RV-71016**	**RV-71016**	
80	Nut-jam	1	**N-18-1**	**N-18-1**	**N-18-1**	
81	Adj. screw-shift hsg.	1	**S-1811-1 (2)**	**3-X-338**	**3-X-338**	
82, 85	Shift. hsg. assy.	1	**A-3280-D-2448**	**A-3280-D-2448**	**A-3280-D-2448**	
83	Capscrew-shift hsg.	4	**S-268-2**	**S-268-2**	**S-268-2**	
84	Washer-shift hsg. capscrew	4	**1229-C-1017**	**1229-C-1017**	**1229-C-1017**	

(1) Not serviced separately
(2) No longer available

SHD, THD, UHD
3200-M-585, 3200-R-1162, 3200-P-1420

ITEM	DESCRIPTION	QTY.	CARRIER 3200-M-585 PART NUMBER DATE 1/74	CARRIER 3200-R-1162 PART NUMBER DATE 1/76	CARRIER 3200-P-1420 PART NUMBER DATE 1/83	REMARKS
85	Capscrew-chamber to hsg.	2	**SN-613-1**	**S-268-2**	**S-268-2**	
86	Gasket-chamber to hsg.	1	**2208-M-429**	**2208-M-429**	**2208-M-429**	
87	Washer-chamber to hsg. stud	2	**1229-B-1666**	**1229-B-1666**	**1229-B-1666**	
88	Nut-chamber to hsg. stud	2	**N-16-1**	**N-16-1**	**N-16-1**	
89	Chamber assy.-air shift	1	**A-3261-C-289**	**A-3261-C-289**	**A-3261-C-289**	
90	Nut-shift fork bolt	1	**NL-16-1**	**NL-16-1**	**NL-16-1**	
91	Ball-shift fork	1	**1199-V-1712**	**1199-V-1712**	**1199-V-1712**	
92, 93(1)	Shift fork assy.	1	**MPS 2637**	**A1-2297-D-862**	**A1-2297-D-862**	
94	Washer-inner shift fork	1	**1229-E-1513**	**1229-M-1599**	**1229-M-1599**	
95	Spring-shift fork	1	**2258-R-408**	**2258-R-408**	**2258-R-408**	
96	Bolt-shift fork	1	**15-X-1337**	**15-X-1337**	**15-X-1337**	
97	Washer-shift assy. lock	1	**1229-C-1407**	**1229-W-1245**	**1229-W-1245**	
98	Washer-shift spring	1	**1229-R-798**	**1229-R-798**	**1229-R-798**	
99	Spring-shift	1	**2258-L-402**	**2258-L-402**	**2258-L-402**	

(1) Not serviced separately

NOTE: THREAD LOCKING LIQUID/DIFFERENTIAL CASE HALVES

When assembling differential case halves in Meritor axles, a thread locking adhesive should be used.
The recommended procedure is as follows:

1. Wipe excess oil and residue from the threaded holes in the case. The holes should be relatively oil free.
2. If new bolts are being used, a yellow coating of Dri-Loc should appear on the threads. Assemble the case with these coated bolts to the required torque.
3. If the original bolts are reused or regular bolts without Dri-Loc are used, Meritor part no. 2297-C-7049 should be used as a thread locking adhesive. Apply the adhesive to the differential case holes only. Thread the bolts and tighten to the required torque.

IMPORTANT: Do not apply Meritor part no. 2297-C-7049 to Dri-Loc coated bolts.
Refer to Meritor Maintenance Manual 1 for complete procedure.

SSHD FAMILY

SHP

3200-M-1235

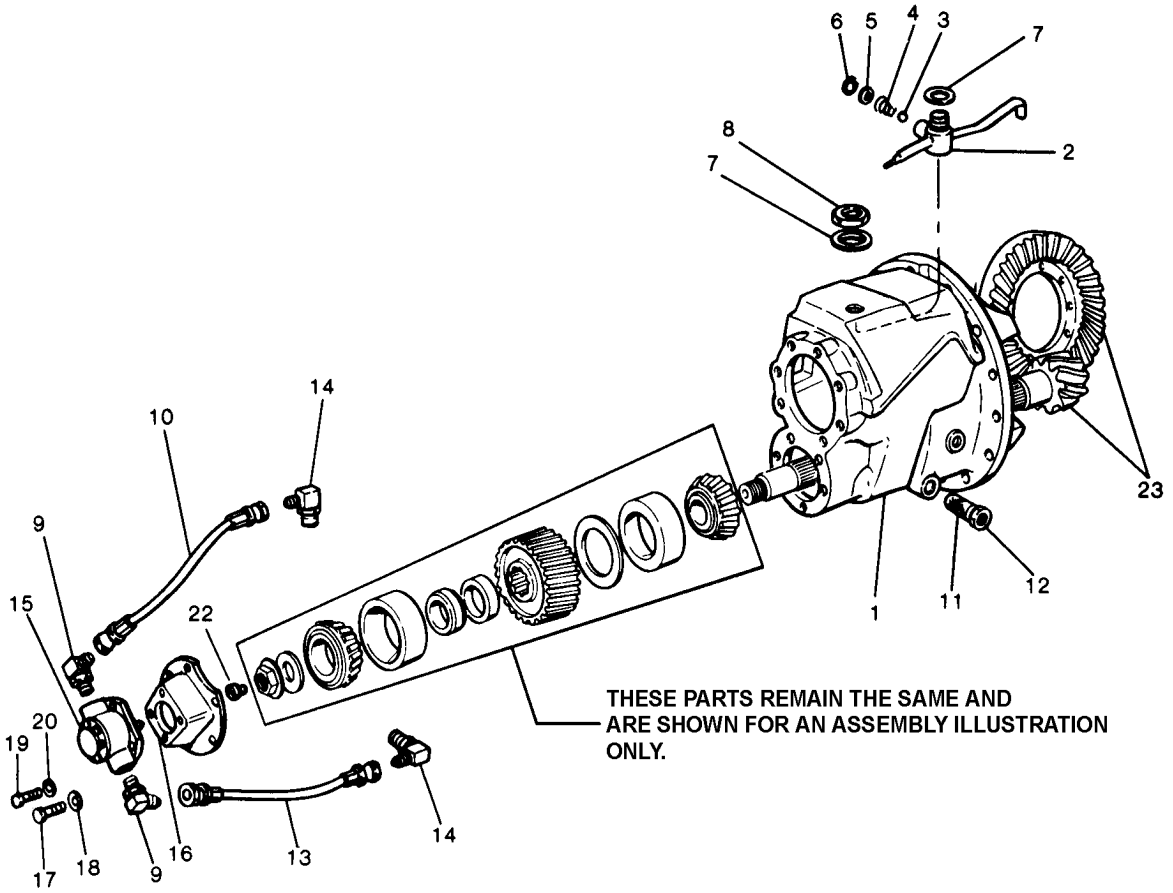

NOTE: WITH THE EXCEPTION OF THE PARTS SHOWN, THE REMAINING COMPONENTS ARE IDENTICAL BETWEEN THE 3200-R-1162 AND THE 3200-M-1235.

OPTIONAL EXTERNAL OIL PUMP

The 3200-M-1235 incorporates the external oil pump. The 3200-M-1235 is the same as the 3200-R-1162 except the carrier housing on the 3200-M-1235 is machined to accept the pump. Due to the pump application, the carriers are non-interchangeable.

DESCRIPTION	PART NO. *	RATIO
Differential carrier assembly, std. diff., 2-1/4"-23 diff. spline, less yoke	**A10-3200-M-1235**	FAST: 3.90, 4.11, 4.33, 4.63
Differential carrier assembly, std. diff., 2-1/4"-23 diff. spline, less yoke	**A11-3200-M-1235**	STANDARD: 5.29, 6.17, 6.83, 7.40
Differential carrier assembly, std. diff., 2-3/8"-24 diff. spline, less yoke	**A12-3200-M-1235**	FAST: 3.90, 4.11, 4.63
Differential carrier assembly, std. diff., 2-3/8"-24 diff. spline, less yoke	**A13-3200-M-1235**	STANDARD: 5.29, 6.17, 6.83, 7.40

* The above carrier assemblies include the optional external oil pump.

SHP
3200-M-1235

ITEM	DESCRIPTION		QTY	PART NO.	REMARKS
1	Carrier & cap assy.		1	**A2-3200-M-1235**	
2	Valve body assy.		1	**A1-3280-K-7603 (2)**	
3	Steel ball-oil tube		1	**1898-E-57**	
4	Spring-relief valve		1	**2258-A-521**	
5	Washer-relief valve spring		1	**1229-Z-2756**	
6	Retainer-valve spring			**No Longer Available**	
7	Washer-relief valve	Inner	1	**1229-Y-2755**	Teflon washer
		Outer	1	**1229-V-2856**	
8	Nut-valve retainer		1	**1827-H-190**	
9	Elbow assy.		2	**A-2206-E-5 (2)**	Includes O-ring
10	Flexible hose assy.		1	**A-2296-D-30 (2)**	Feed hose
11	Filter screen-oil		1	**2297-D-3644 (6)**	
12	Adapter assy.-filter screen		1	**A-2206-D-4 (2)**	
13	Flexible hose assy.		1	**A-2296-E-31 (2)**	Suction hose
14	Elbow assy.		2	**1199-E-3359**	
15	Pump assy.-oil		1	**A-3303-H-8**	Tuthill Model 2RFD-1
16	Cover-pinion shaft		1	**3266-U-749 (2)**	
17	Capscrew-pinion shaft cover		6	**S-268-2**	
18	Washer-pinion cover capscrew		6	**1229-B-1666**	
19	Capscrew-pump to cover		4	**S-2510-2**	
20	Washer-pump to cover capscrew		4	**1229-E-1669**	
21	Gasket-cover (Silastic)		3 oz.	**2297-A-7021**	
22	Drive button-pump		1	**2297-C-3799**	
23	Drive gear & pinion assy.		1	**See SECTION 4**	

(2) No longer available
(6) Contact Specifications for replacement information (888-725-9355)

SSHD FAMILY

SHR, THR, UHR
3200-H-606 & 3200-C-1433

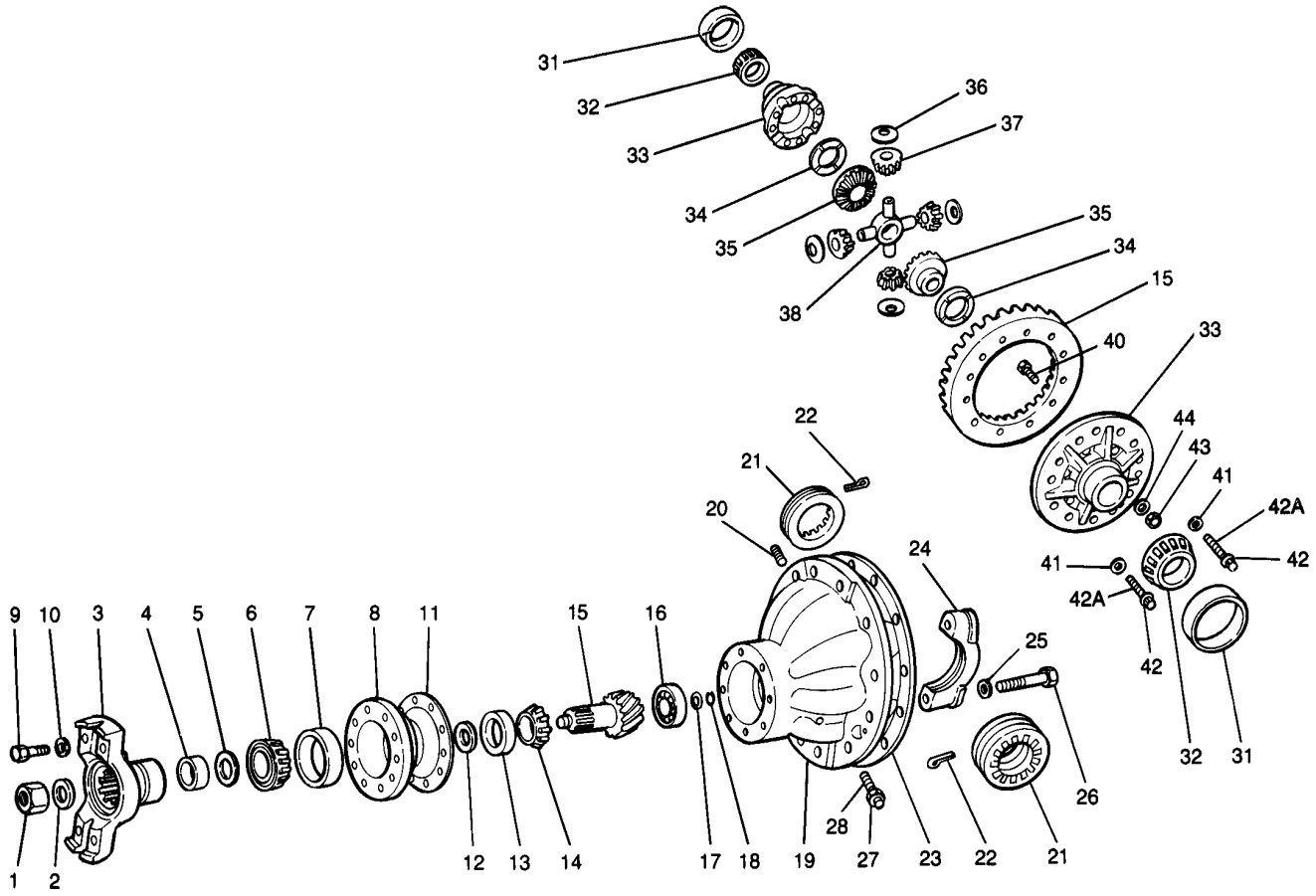

SHR, THR, UHR
AVAILABLE DIFFERENTIAL CARRIERS

DIFFERENTIAL CARRIER ASSEMBLY PART NO.	DESCRIPTION	RATIO	REMARKS
B48-3200-C-1433	Diff. carrier assy., std. diff., 2-1/4"-23 diff. spline, less yoke	FAST: 3.73, 3.90, 3.91, 4.10, 4.11, 4.30, 4.33, 4.56, 4.63	For remanufactured carriers, less yoke, order by specifying SHRA plus ratio for 2-3/8"-24 spline or SHRB plus ratio for 2-1/4"-23 spline
		STD: 4.89, 5.29, 5.38, 5.57, 6.14, 6.17, 6.83, 7.33, 7.40	
A45-3200-C-1433	Diff. carrier assy., std. diff., 2-3/8"-24 diff. spline, less yoke	STD: 4.89, 5.29, 5.38, 5.57, 6.14, 6.17, 6.83, 7.33, 7.40	
		FAST: 3.73, 3.90, 3.91, 4.10, 4.11, 4.30, 4.33, 4.56, 4.63	

SHR, THR, UHR
3200-H-606 & 3200-C-1433

ITEM	DESCRIPTION	QTY.	CARRIER 3200-H-606 PART NUMBER DATE 1/74	CARRIER 3200-C-1433 PART NUMBER DATE 1/83	REMARKS
1	Nut-drive pinion	1	**1227-J-946**	**1227-J-946**	
2	Washer-drive pinion nut	1	**1229-T-1736**	**1229-T-1736**	
3	Yoke/flange-input	1	**See SECTION 5**	**See SECTION 5**	
4	Oil seal-yoke flange	1	**A1-1805-S-149**	**A-1205-P-1914**	
5	Thrust washer-bearing	1	**1229-E-1071**	**1229-E-1071**	
6	Bearing cone-outer	1	**H-715334**	**H-715334**	
7	Bearing cup-outer	1	**H-715311**	**H-715311**	
8	Cage & cup assy.-drive pinion	1	**A-3226-T-878**	**A-3226-L-896**	
9	Capscrew-bearing cage	8	**S-2813-2**	**S-2813-2**	
10	Washer-brg. cage capscrew	8	**1229-C-1511**	**1229-C-1511**	
11	Shim-pinion bearing cage .003	1	**2203-L-1260**	**2203-L-1260**	See KIT 577, SECTION 6
	.005	1	**2203-A-469**	**2203-A-469**	
	.010	3	**2203-B-470**	**2203-B-470**	
12	Spacers-drive pinion	2	**See KIT 521**	**See KIT 521**	See SECTION 6
13	Bearing cup-inner	1	**H-715311**	**H-715311**	
14	Bearing cone-inner	1	**H-715343**	**H-715343**	
15	Drive gear & pinion assy.	1	**See SECTION 4**	**See SECTION 4**	
16	Rear bearing-drive pinion	1	**1228-X-154**	**1228-X-154**	Roller bearing
17	Retainer-rear bearing	1	**1199-Z-1430**	**1199-Z-1430**	
18	Lock ring-rear bearing	1	**1229-U-1113**	**1229-U-1113**	
19	Carrier & cap assy.	1	**A2-3200-C-1433**	**A2-3200-C-1433**	
20	Plug-carrier filler	1	**P-212**	**P-212**	
21	Adj. ring-differential bearing	2	**2214-X-50**	**2214-X-50**	L.H. & R.H.
22	Cotter-bearing adj. ring	2	**1199-M-2457**	**1199-M-2457**	
23	Gasket-carrier to hsg. (Silastic)	3 oz.	**2297-A-7021**	**2297-A-7021**	
24 (1)	Bearing cap-differential	---	**---**	**---**	Part of Item 19
25	Washer-differential brg. cap	4	**1229-T-1554**	**1229-T-1554**	
26	Bolt-differential brg. cap	4	**S-21444-2**	**S-21444-2**	
27	Nut-thrust screw	1	**13-X-41**	**13-X-41**	
28	Screw-thrust	1	**15-X-1025**	**15-X-1025**	
31	Bearing cup-differential	2	**47820**	**47820**	L.H. & R.H.
32	Bearing cone-differential	2	**47890**	**47890**	L.H. & R.H.
33(1), 41, 42, 42A	Diff. case assy.-case only	1	**A32-3235-N-1106**	**A-3235-N-1678**	Standard ratios
		1	**A39-3235-Q-1109**	**A-3235-Q-1681**	Fast ratios
33(1) thru 38, 41, 42, 42A	Diff. case & nest assy. (for axles using 2-1/4"-23 spline)	1	**A4-3235-N-1106**	**A3-3235-N-1678**	Standard ratios
		1	**A6-3235-Q-1109**	**A3-3235-Q-1681**	Fast ratios
33(1) thru 38, 41, 42, 42A	Diff. case & nest assy. (for axles using 2-3/8"-24 spline)	1	**A1-3235-N-1106**	**A1-3235-N-1678**	Standard ratios
		1	**A1-3235-Q-1109**	**A1-3235-Q-1681**	Fast ratios
34	Thrust washer-side gear	2	**1229-E-993**	**1229-E-993**	See KITS 327, 347, 348 & 383, SECTION 6
35	Side gear differential 23 Spl.	2	**2234-K-271**	**2234-K-271**	KITS 327 & 347, SECT. 6
	24 Spl.	2	**2234-F-344**	**2234-F-344**	KITS 348 & 383, SECT. 6
36	Thrust washer-diff. pinion	4	**1229-D-992**	**1229-D-992**	KITS 327 or 383 with spider. KITS 347 or 348 less spider. SECTION 6
37	Pinion-differential	4	**2233-U-99**	**2233-U-99**	
38	Spider-differential	1	**3278-A-79**	**3278-A-79**	

(1) Not serviced separately

SSHD FAMILY

SHR, THR, UHR
3200-H-606 & 3200-C-1433

ITEM	DESCRIPTION		QTY.	CARRIER 3200-H-606 PART NUMBER DATE 1/74	CARRIER 3200-C-1433 PART NUMBER DATE 1/83	REMARKS
39	Rivet-gear to case		12	**RV-71016**	**RV-71016**	
40	Bolt-gear to case		12	**15-X-1474**	**15-X-1474**	See KIT 948, SECTION 6
41	Washer-diff. case		12	**1229-U-1503**	**1229-U-1503**	
42	Bolt-diff. case	short	4	**S-21020A-2**	**S-21020A-2**	
		long	8	**S-21028A-2**	**S-21028A-2**	
42A	Thread locking liquid/diff. case		1	**2297-C-7049**	**2297-C-7049**	.34 oz tube. See NOTE below
43	Nut-gear to case		12	**NL-110-1**	**NL-110-1**	See KIT 948, SECTION 6
44	Washer-gear to case		12	**1229-U-1503**	**1229-U-1503**	

NOTE: THREAD LOCKING LIQUID/DIFFERENTIAL CASE HALVES

When assembling differential case halves in Meritor axles, a thread locking adhesive should be used.
The recommended procedure is as follows:

1. Wipe excess oil and residue from the threaded holes in the case. The holes should be relatively oil free.
2. If new bolts are being used, a yellow coating of Dri-Loc should appear on the threads. Assemble the case with these coated bolts to the required torque.
3. If the original bolts are reused or regular bolts without Dri-Loc are used, Meritor part no. 2297-C-7049 should be used as a thread locking adhesive. Apply the adhesive to the differential case holes only. Thread the bolts and tighten to the required torque.

IMPORTANT: Do not apply Meritor part no. 2297-C-7049 to Dri-Loc coated bolts.
Refer to Meritor Maintenance Manual 1 for complete procedure.

SECTION 2

INDEX

Axle Housing Assemlies **Page**

C-100 Series..... 2-2
C-102/103 Series..... 2-3
D Series..... 2-4
F Series..... 2-5
H-172/173 Series..... 2-6
L-172/173 Series..... 2-7
P-174 Series 2-8
R/S-170 Series..... 2-9
SL/SQHD Family..... 2-10
SL/SQ-100 Family..... 2-11
SSHD Family..... 2-12

AXLE HOUSING ASSEMBLIES

C SERIES
C-100

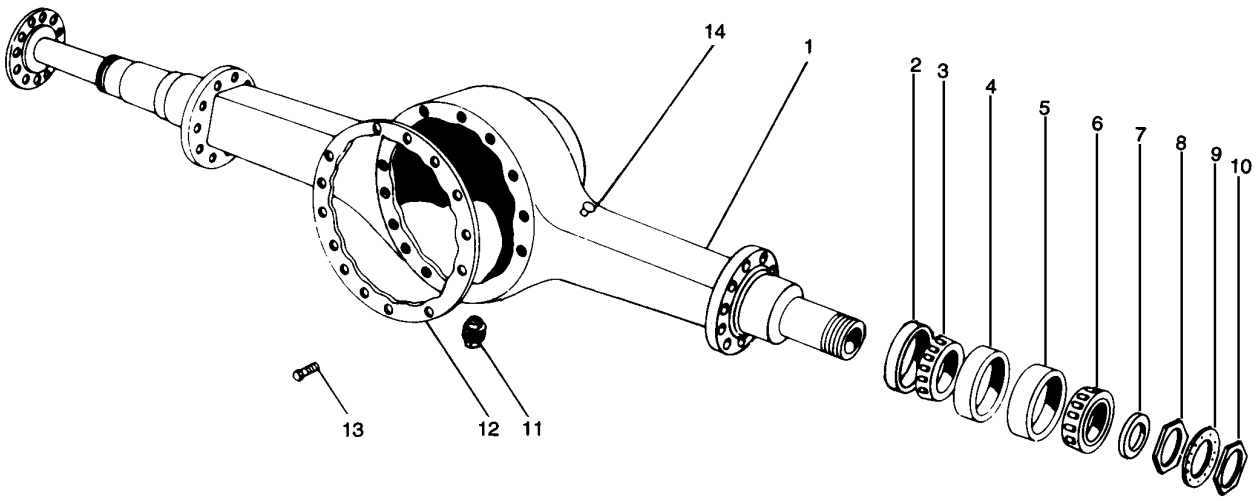

ITEM	DESCRIPTION		QTY	PART NO.	REMARKS
1	Axle housing assemblies		1	**As specified**	
2	Oil seal assembly-inner		2	**A-1205-G-735**	
3	Cone-inner bearing		2	**3984**	
4	Cup-inner bearing		2	**3920**	
5	Cup-outer bearing		2	**453X**	
6	Cone-outer bearing		2	**462**	
7	Washer-thrust		2	**1229-R-720**	
8, 10	Adjuster nut-inner & outer		4	**1227-F-162**	
9	Washer-adjuster nut		2	**1229-S-721**	
11	Plug-drain hole		1	**P-212**	
12 (1)	Gasket-carrier to hsg. (Silastic)		3 oz.	**2297-A-7021**	
13	Capscrew-carrier	short	8	**S-2710-2**	
	to housing	long	4	**S-2712-2**	
14	Breather assy.-housing		1	**A-1199-C-1043**	

(1) Gasket no longer used. Replaced by silastic.

C SERIES
C-102/103

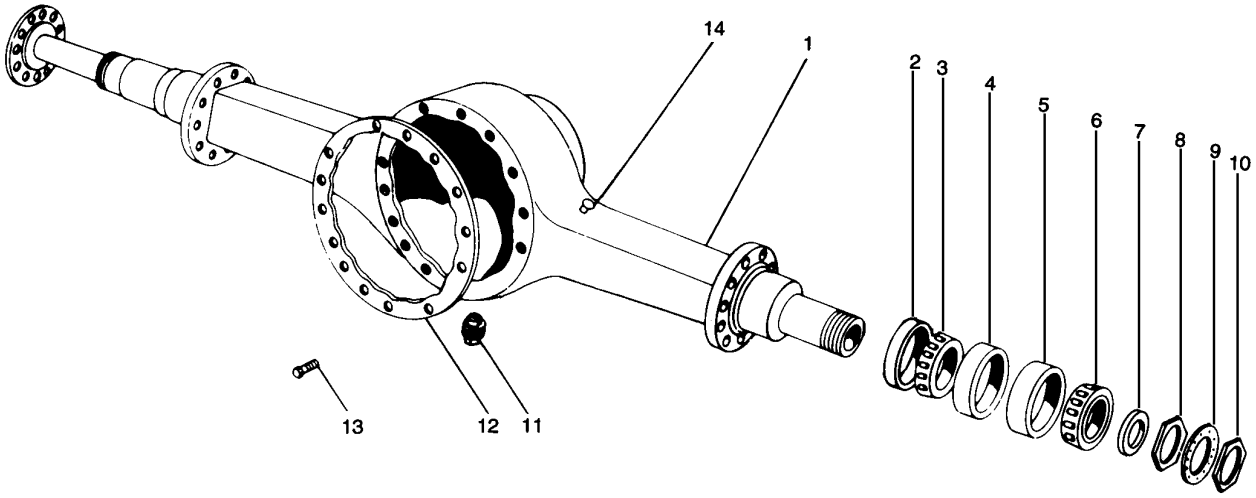

ITEM	DESCRIPTION	QTY	PART NO.	REMARKS
1	Axle housing assemblies	1	**As specified**	
2	Oil seal assembly-inner	2	**A-1205-T-1996**	
3	Cone-inner bearing	2	**395CS**	
4	Cup-inner bearing	2	**394CS**	
5	Cup-outer bearing	2	**382**	
6	Cone-outer bearing	2	**387A**	
7	Washer-thrust	2	**1229-R-720**	
8, 10	Adjuster nut-inner & outer	4	**1227-B-1172**	
9	Washer-adjuster nut	2	**1229-S-2983**	
11	Plug-magnetic drain hole	1	**1250-E-473**	
12 (1)	Gasket-carrier to hsg. (Silastic)	3 oz.	**2297-A-7021**	
13	Capscrew-carrier to housing — short	8	**S-2710-2**	
	Capscrew-carrier to housing — long	4	**S-2712-2**	
14	Breather assy.-housing	1	**A-1199-C-1043**	

(1) Gasket no longer used. Replaced by silastic.

AXLE HOUSING ASSEMBLIES

D SERIES
D-140

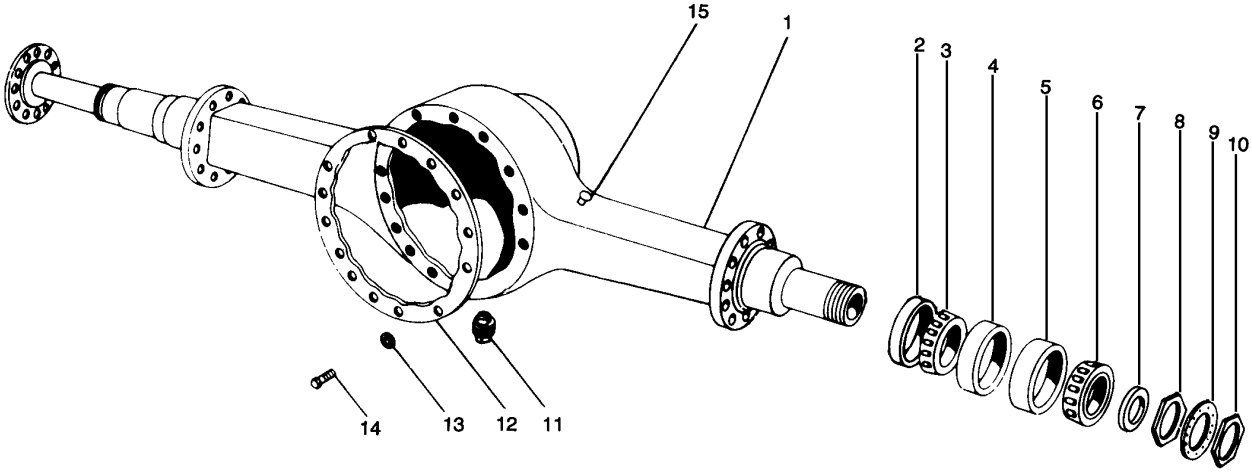

ITEM	DESCRIPTION		QTY	PART NO.	REMARKS
1	Axle housing assemblies		1	**As specified**	
2	Oil seal assembly-inner		2	**A-1205-T-1502 (2)**	
3	Cone-inner bearing		2	**3984**	
4	Cup-inner bearing		2	**3920**	
5	Cup-outer bearing		2	**453X**	
6	Cone-outer bearing		2	**462**	
7	Washer-thrust		2	**1229-R-720**	
8, 10	Adjuster nut-inner & outer		4	**1227-F-162**	
9	Washer-adjuster nut		2	**1229-S-721**	
11	Plug-magnetic drain hole		1	**1250-E-473**	
12 (1)	Gasket-carrier to hsg. (Silastic)		3 oz.	**2297-A-7021**	
13	Washer-carrier to housing		12	**1229-C-1511**	3200-R-1110 carrier only
			6	**1229-C-1511**	3200-A-1093 carrier only
			4	**1229-E-1513**	
14	Capscrew-carrier to housing	1.50 x 1/2	12	**S-2812-2**	3200-R-1110 carrier only
		1.50 x 1/2	6	**S-2812-2**	3200-A-1093 carrier only
		1.50 x 7/16	2	**S-2712-2**	
		2.25 x 7/16	2	**S-2718-2**	
15	Breather assembly-housing		1	**A-1199-C-1043**	

(1) Gasket no longer used. Replaced by silastic.

F SERIES
F-106, F-140, F-145, F-146, F-149

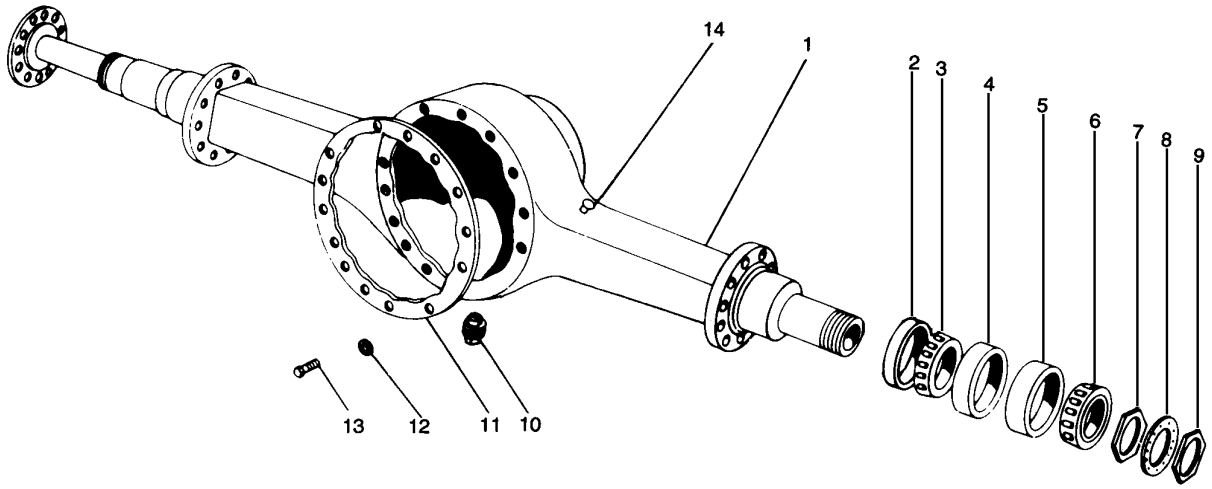

ITEM	DESCRIPTION		QTY	PART NO.	REMARKS
1	Axle housing assemblies		1	**As specified**	
2	Oil seal assembly-inner		2	**A-1205-W-1557**	
3	Cone-inner bearing		2	**33287**	
4	Cup-inner bearing		2	**33462**	
5	Cup-outer bearing		2	**3920**	
6	Cone-outer bearing		2	**3982**	
7	Adjuster nut-inner		2	**1227-U-515**	
8	Washer-adjuster nut		2	**1229-C-1459**	
9	Adjuster nut-outer		2	**1227-D-446**	
10	Plug-magnetic drain hole		1	**1250-E-473**	
11 (1)	Gasket-carrier to hsg. (Silastic)		3 oz.	**2297-A-7021**	
12	Washer-carrier to housing		12	**1229-C-1511**	3200-R-1110 carrier only
			6	**1229-C-1511**	3200-A-1093 carrier only
			4	**1229-E-1513**	
13	Capscrew-carrier to housing	1.50 x 1/2	12	**S-2812-2**	3200-R-1110 carrier only
		1.50 x 1/2	6	**S-2812-2**	3200-A-1093 carrier only
		1.50 x 7/16	2	**S-2712-2**	
		2.25 x 7/16	2	**S-2718-2**	
14	Breather assembly-housing		1	**A-1199-C-1043**	

(1) Gasket no longer used. Replaced by silastic.

AXLE HOUSING ASSEMBLIES

H-172/173 SERIES

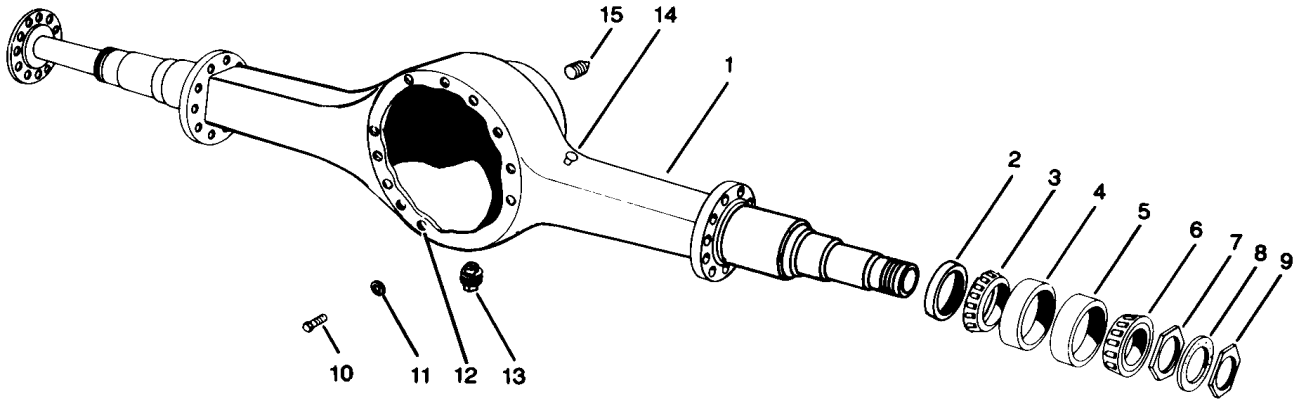

ITEM	DESCRIPTION		QTY	PART NO.	REMARKS
1	Axle housing assembly		1	**As specified**	
2	Oil seal assembly-inner		2	**A-1205-B-574**	
3	Cone-inner bearing		2	**495AX**	
4	Cup-inner bearing		2	**493**	
5	Cup-outer bearing		2	**3920**	
6	Cone-outer bearing		2	**3984**	
7	Adjuster nut-inner		2	**1227-Z-1040**	
8	Washer-adjuster nut		2	**1229-G-1021**	
9	Adjuster nut-outer		2	**1227-E-1045**	
10	Capscrew-carrier	short	10	**S-2811-2**	
	to housing	long	4	**S-2816-2**	
11	Washer-carier to housing		14	**1229-C-1511**	
12	Gasket-carrier to hsg. (Silastic)		3 oz.	**2297-A-2071**	
13	Plug-magnetic drain hole		1	**1250-E-473**	
14	Breather assembly-housing		1	**A-1199-P-1394**	
15	Plug-heat indicators		1	**P-28S**	

L-172/173 SERIES

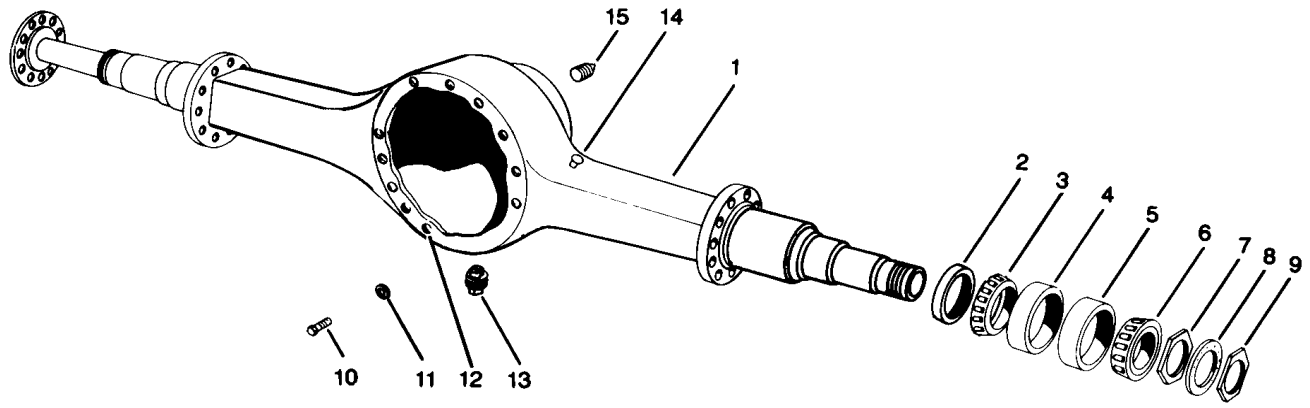

ITEM	DESCRIPTION		QTY	PART NO.	REMARKS
1	Axle housing assembly		1	**As specified**	
2	Oil seal assembly-inner		2	**A-1205-W-1349**	
3	Cone-inner bearing		2	**47686**	
4	Cup-inner bearing		2	**47620**	
5	Cup-outer bearing		2	**39520**	
6	Cone-outer bearing		2	**39590**	
7	Adjuster nut-inner		2	**1227-Z-1040**	
8	Washer-adjuster nut		2	**1229-G-1021**	
9	Adjuster nut-outer		2	**1227-E-1045**	
10	Capscrew-carrier	short	10	**S-2811-2**	
	to housing	long	4	**S-2817-2**	
11	Washer-carier to housing		14	**1229-C-1511**	
12	Gasket-carrier to hsg. (Silastic)		3 oz.	**2297-A-7021**	
13	Plug-magnetic drain hole		1	**1250-E-473**	
14	Breather assembly-housing		1	**A-1199-P-1394**	
15	Plug-heat indicators		1	**P-28S**	

AXLE HOUSING ASSEMBLIES

P-174 SERIES

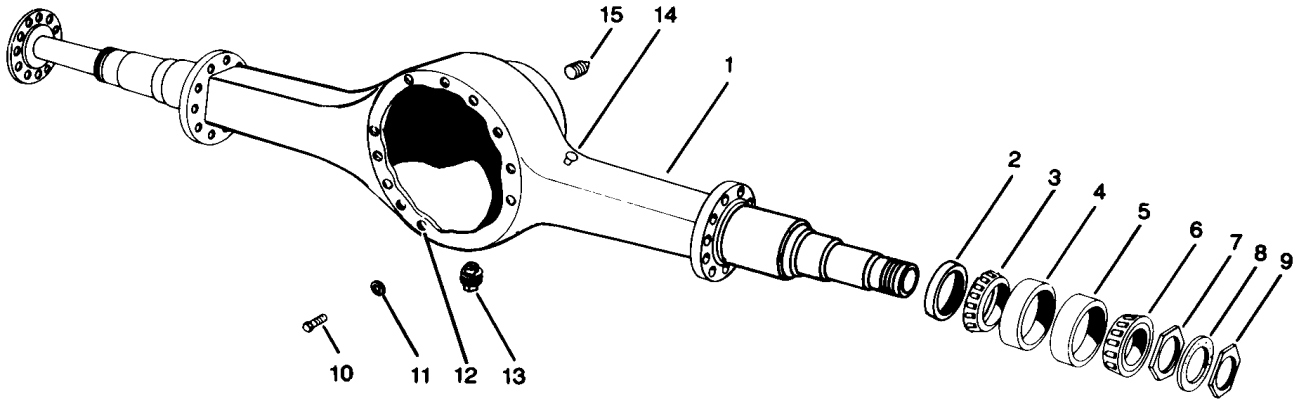

ITEM	DESCRIPTION		QTY	PART NO.	REMARKS
1	Axle housing assembly		1	**As specified**	
2	Oil seal assembly-inner		2	**A-1205-Q-2487**	
3	Cone-inner bearing		2	**594A**	
4	Cup-inner bearing		2	**592A**	
5	Cup-outer bearing		2	**572**	
6	Cone-outer bearing		2	**580**	
7	Adjuster nut-inner		2	**1227-W-517**	
8	Washer-adjuster nut		2	**1229-U-1009**	
9	Adjuster nut-outer		2	**1227-R-330**	
10	Capscrew-carrier	short	10	**S-2811-2**	
	to housing	long	4	**S-2816-2**	
11	Washer-carier to housing		14	**1229-C-1511**	
12	Gasket-carrier to hsg. (Silastic)		3 oz.	**2297-A-7021**	
13	Plug-magnetic drain hole		1	**1250-E-473**	
14	Breather assembly-housing		1	**A-1199-P-1394**	
15	Plug-heat indicators		1	**P-28S**	

R-170, S-170 SERIES

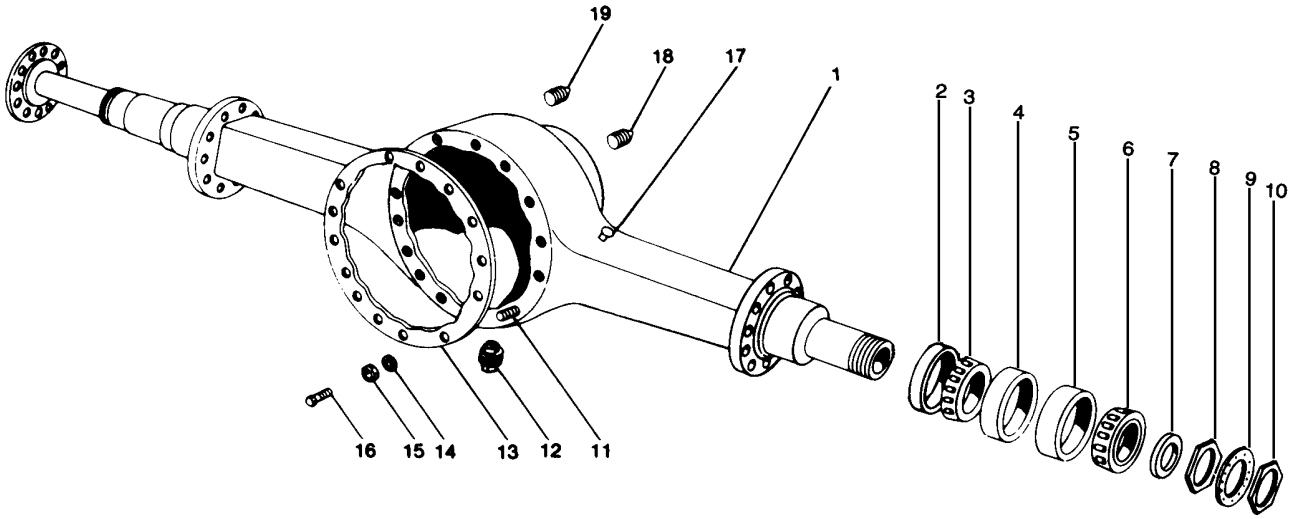

ITEM	DESCRIPTION		QTY	PART NO.	REMARKS
1	Axle housing assemblies		1	**As specified**	
2	Wiper-housing spindle-inner		2	**1199-B-1666 (2)**	
3	Oil seal assembly-inner		2	**A-1205-T-696**	
				A-1205-Q-2487	Optional unitized seal.
4	Cone-inner bearing		2	**598A**	Old construction. See drawing above
			2	**594A**	
5	Cup-inner bearing		2	**592A**	
6	Cup-outer bearing		2	**572**	
7	Cone-outer bearing		2	**580**	
8	Adjuster nut-inner		2	**1227-W-517**	
9	Washer-adjuster nut		2	**1229-U-1009**	
10	Adjuster nut-outer		2	**1227-R-330**	
11	Stud-carrier to housing		4	**4-X-1445**	
12	Plug-magnetic drain hole		1	**1250-E-473**	
13 (1)	Gasket-carrier to hsg. (Silastic)		3 oz.	**2297-A-7021**	
14	Washer-carrier to housing		14	**1229-U-1503**	
15	Nut-carrier to housing stud		4	**N-110-1**	
16	Capscrew-carrier to housing	short	6	**S-21016-2**	
		medium	2	**S-21024-1**	
		long	2	**10-X-1599**	
17	Housing breathing assembly		1	**A-1199-P-1394**	
18	Plug-heat indicators		1	**P-28S**	

(1) Gasket no longer used. Replaced by silastic.
(2) No longer available

AXLE HOUSING ASSEMBLIES

SL/SQHD FAMILY

AXLE HOUSING ASSEMBLY
(FORWARD-REAR & REAR-REAR)

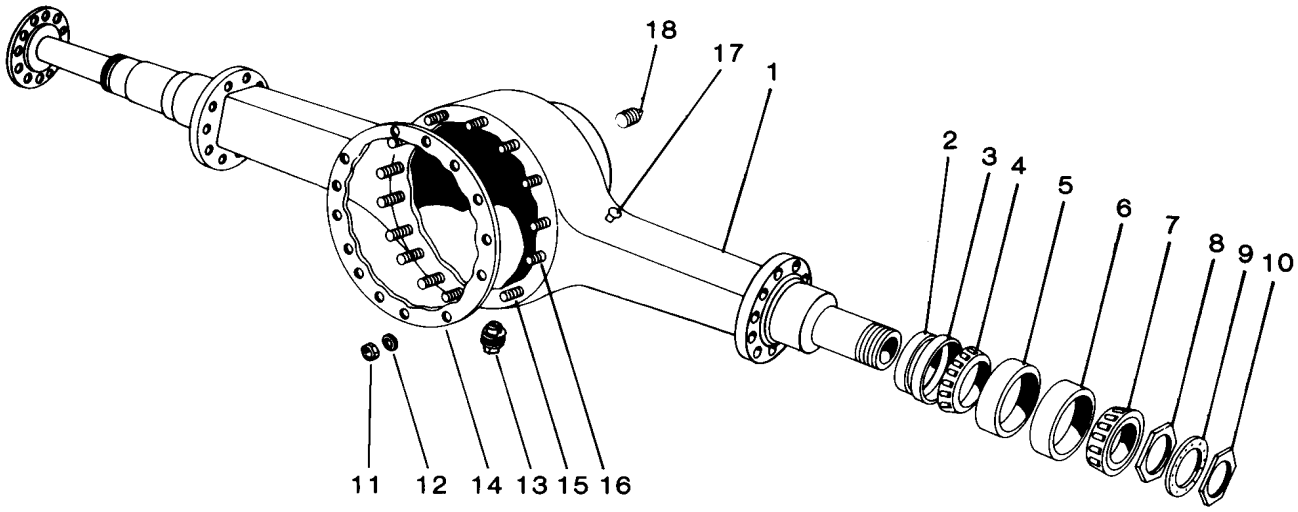

ITEM	DESCRIPTION	QTY	MODELS LHDE, LHDG, LHDJ, LHDK, LHDM, LHER, LHGR, LHJR, LHKR, LHMR (4)	MODELS LHD, LHR (5)	MODELS QHD, QHR
1	Axle housing assemblies	--	**As specified**	**As specified**	**As specified**
2	Oil seal & wiper assy.-inner	2	**A-1205-W-1349**		
	Oil seal only	2			**A-1205-Q-2487**
	Grease seal only-inner	2			**A-1205-T-696**
3	Wiper-inner-used with grease seals only	2	**1199-V-1296 (2)**		**1199-B-1666 (2)**
4	Cone-inner wheel bearing	2	**47686**	**582**	**598A**
5	Cup-inner wheel bearing	2	**47620**	**572**	**592A**
6	Cup-outer wheel bearing	2	**39520**	**42620**	**572**
7	Cone-outer wheel bearing	2	**39590**	**42687**	**580**
8	Adjuster nut-inner	2	**1227-Z-1040**	**1227-V-516**	**1227-W-517**
9	Washer-adjuster nut	2	**1229-G-1021**	**1229-R-1058**	**1229-U-1009**
10	Adjuster nut-outer	2	**1227-E-1045**	**1227-H-346**	**1227-R-330**
11	Nut-carrier to housing	5	**NL-110-1**	**NL-110-1**	**NL-110-1**
12	Washer-carrier to housing	14	**1229-U-1503**	**1229-U-1503**	**1229-U-1503**
13	Plug-drain hole	1	**1250-E-473**	**1250-E-473**	**1250-E-473**
14 (1)	Gasket-carrier to hsg. (Silastic)	3 oz.	**2297-A-7021**	**2297-A-7021**	**2297-A-7021**
15	Stud-carrier to housing - Medium	4	**SN-1023-1**	**SN-1023-1**	**SN-1023-1**
	Short	1	**SN-1021-1**	**SN-1021-1**	**SN-1021-1**
16	Capscrew-carrier to housing	9	**10-X-1594**	**10-X-1594**	**10-X-1594**
17	Breather assy.-axle housing	1	**A-1199-P-1394**	**A-1199-P-1394**	**A-1199-P-1394**
18	Plug assy.-heat indicator	1	**P-28S**	**P-28S**	**P-28S**

(1) Gasket no longer used. Replaced by silastic.
(2) No longer available
(4) 2.625-12 spindle thread.
(5) Standard type, 3.00-12 spindle thread.

SL/SQ100 FAMILY

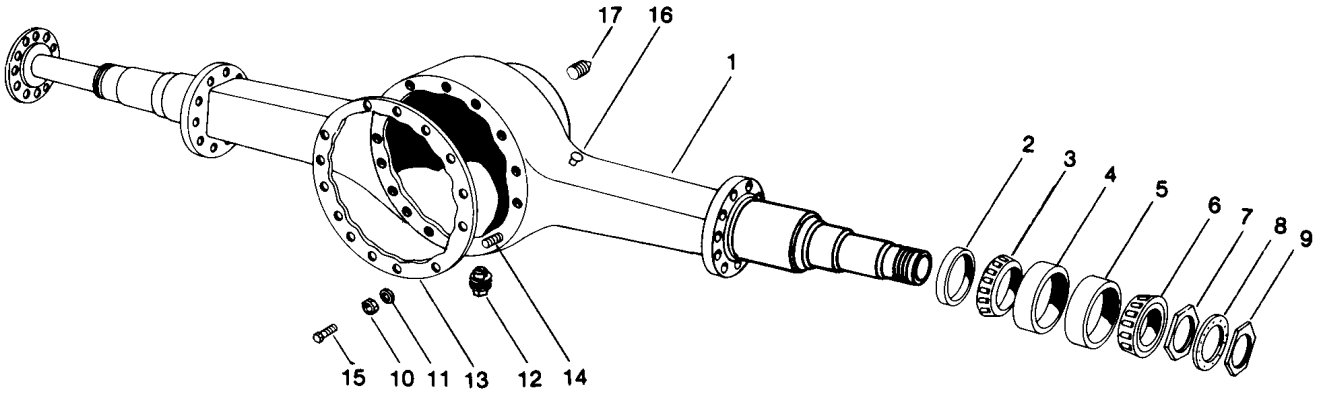

ITEM	DESCRIPTION	MODEL	QTY.	PART NO.	REMARKS
1	Axle housing assembly		1	**As Specified**	
2	Oil seal assembly-inner	SQHP, SQ-100/P	2	**A-1205-Q-2487**	
		SL-100/P		**A-1205-W-1349**	
3	Cone-inner wheel bearing	SQHP, SQ-100/P	2	**594A**	
		SL-100/P		**47686**	
4	Cup-inner wheel bearing	SQHP, SQ-100/P	2	**592A**	
		SL-100/P		**47620**	
5	Cup-outer wheel bearing	SQHP, SQ-100/P	2	**572**	
		SL-100/P		**39520**	
6	Cone-outer wheel bearing	SQHP, SQ-100/P	2	**580**	
		SL-100/P		**39590**	
7	Aduster nut-inner	SQHP, SQ-100/P	2	**1227-W-517**	
		SL-100/P		**1227-Z-1040**	
8	Washer-adjuster nut	SQHP, SQ-100/P	2	**1229-U-1009**	
		SL-100/P		**1229-G-1021**	
9	Adjuster nut-outer	SQHP, SQ-100/P	2	**1227-R-330**	
		SL-100/P		**1227-E-1045**	
10	Nut-carrier to housing		2	**NL-110-1**	
11	Washer-carrier to housing		14	**1229-U-1503**	
				1229-A-2445	Aluminum carrier
12	Plug-magnetic drain		1	**1250-E-473**	
13 (1)	Gasket-carrier to housing (silastic-3 oz. tube)		1	**2297-A-7021**	
14	Stud-carrier to housing		2	**SN-1021-1**	
15	Capscrew-carrier to housing		14	**10-X-1594**	
			12	**S-21016-2**	Aluminum carrier
16	Breather assembly		1	**A-1199-P-1394**	
17	Heat indicator plug assembly		1	**P-28S**	

(1) Gasket no longer used. Replaced by silastic.
(2) No longer available

AXLE HOUSING ASSEMBLIES

SSHD FAMILY

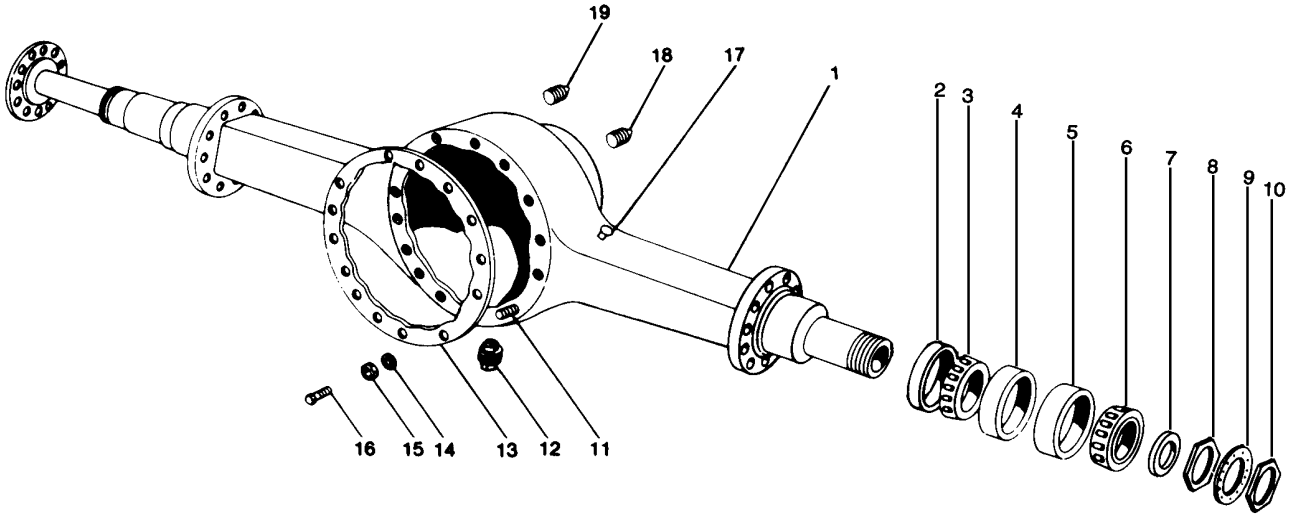

ITEM	DESCRIPTION		QTY	PART NO.	REMARKS
1	Forward-rear axle housing		1	**As specified**	Specify forward axle spec.
	Rear-rear axle housing		1		Specify rear axle spec.
2	Wiper assy.-oil seal		2	**2297-M-6981**	
3	Oil seal-inner		2	**No Longer Available**	
4	Bearing cone-inner		2	**594A**	
5	Bearing cup-inner		2	**592A**	
6	Bearing cup-outer		2	**572**	
7	Bearing cone-outer		2	**580**	
8	Nut-inner wheel brg. adj.		2	**1227-W-517**	
9	Lockwasher-adj. nut		2	**1229-U-1009**	
10	Nut-outer wheel brg. adj.		2	**1227-R-330**	
11	Stud-carrier to	short	2	**SN-1020-1**	Forward-rear housings only.
	housing	long	2	**SN-1028-1**	
12	Plug-magnetic drain		1	**1250-E-473**	
13 (1)	Gasket-carrier to hsg. (Silastic)		3 oz.	**2297-A-7021**	
14	Washer-carrier to housing		14	**1229-U-1503**	
15	Nut-carrier to housing		4	**N-110-1**	Forward-rear housings only.
16	Capscrew-carrier	short	8	**S-21014-1**	Used with Item 4 only.
	to housing	long	2	**S-21022-2**	
		short	10	**10-X-1594**	Rear-rear housings only.
		long	4	**S-21024-1**	
17	Breather assy.-housing		1	**A-1199-P-1394**	
18	Plug assy.-heat indicator		1	**P-28S**	
19	Plug-filler		1	**P-212**	

(1) Gasket no longer used. Replaced by silastic.

SECTION 3

INDEX

Axle Shaft Assemblies **Page**

C Series..... 3-2
D Series..... 3-3
F Series..... 3-4
H-172 Series..... 3-6
H-173, L-172/173 Series..... 3-7
P-174 Series 3-8
R/S-170 Series..... 3-9
SL/SQHD Family..... 3-10
SL/SQ-100 Family..... 3-11
SSHD Family..... 3-12

AXLE SHAFT ASSEMBLIES

C SERIES

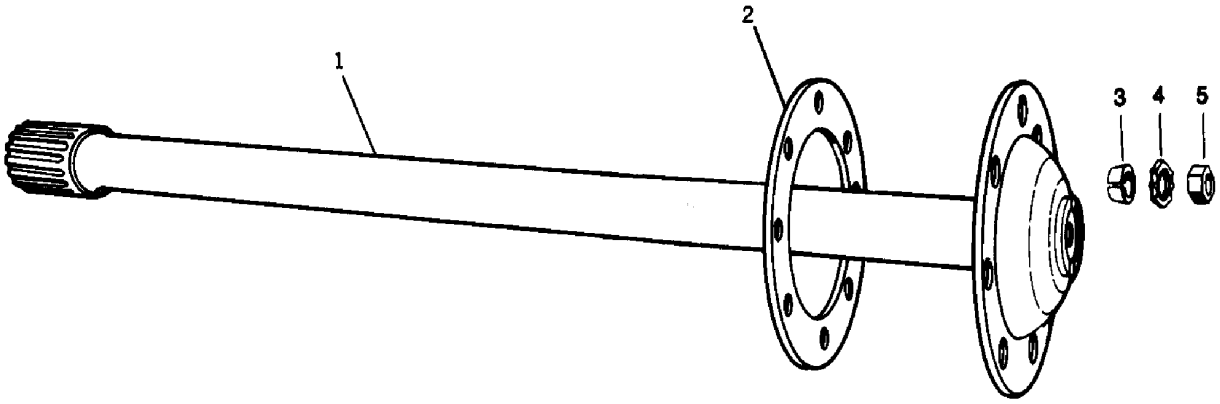

ITEM	DESCRIPTION	QTY	PART NO.	REMARKS
1	Axle shaft	2	**See chart below**	
2	Gasket	2	**2208-U-411**	
3	Dowel	16	**1246-Z-1170**	
4	Washer, shakeproof	16	**1229-U-515Z**	
5	Nut	16	**N-17**	

C100

PART NUMBER *	FORGING NUMBER	BODY DIA. (IN.)	LENGTH (IN.)	SPLINE SIZE (IN.)	SPLINE LENGTH (IN.)	FLANGE DIA. (IN.)	NUMBER OF HOLES	HOLE SIZE (IN.)	BOLT CIRCLE (IN.)	HOLE TYPE
3202-M-2717 (2)	3202-L-2716	1.44	35.78	1.62-16	1.84	5.58	8	.44	4.75	Taper

C102/103

PART NUMBER *	FORGING NUMBER	BODY DIA. (IN.)	LENGTH (IN.)	SPLINE SIZE (IN.)	SPLINE LENGTH (IN.)	FLANGE DIA. (IN.)	NUMBER OF HOLES	HOLE SIZE (IN.)	BOLT CIRCLE (IN.)	HOLE TYPE
3202-N-8048 (2)	3202-M-8047	1.44	37.97	1.66-32	2.00	5.72	8	.57	4.75	Taper

* Less lube hole and puller holes.
(2) No longer available

D SERIES
D-140

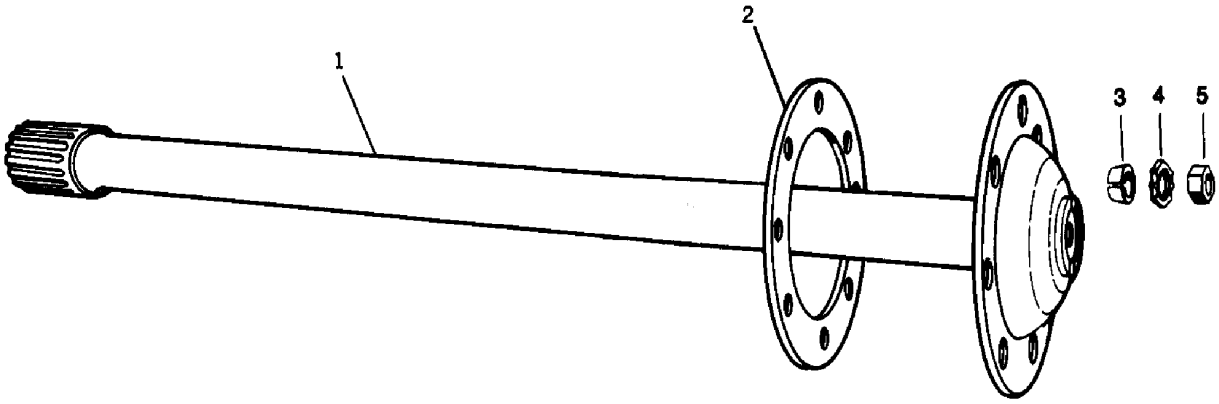

ITEM	DESCRIPTION	QTY	PART NO.	REMARKS
1	Axle shaft	2	**See chart below**	
2	Gasket	2	**2208-U-411**	
3	Dowel	16	**1246-Z-1170**	
4	Washer, shakeproof	16	**1229-U-515Z**	
5	Nut	16	**N-17**	

PART NUMBER *	FORGING NUMBER	BODY DIA. (IN.)	LENGTH (IN.)	SPLINE SIZE (IN.)	SPLINE LENGTH (IN.)	FLANGE DIA. (IN.)	NUMBER OF HOLES	HOLE SIZE (IN.)	BOLT CIRCLE (IN.)	HOLE TYPE
3202-H-2686	3202-G-2685	1.57	36.18	1.75-16	2.71	5.58	8	.44	4.75	Taper
3202-H-5520	3202-M-4121	1.57	29.03	1.75-16	2.62	5.58	8	.44	4.75	Taper
3202-E-7415	3202-G-2685	1.57	36.18	1.77-19	2.60	5.58	8	.44	4.75	Taper
3202-N-7450	3202-M-4121	1.57	29.03	1.77-19	2.62	5.58	8	.44	4.75	Taper
3202-T-7820	3202-G-2685	1.57	36.16	1.75-34	2.34	5.58	8	.44	4.75	Taper
3202-P-7868	3202-D-4138	1.57	37.15	1.75-34	2.34	5.58	8	.44	4.75	Taper
3202-Q-7869	3202-X-4132	1.57	35.03	1.75-34	2.34	5.58	8	.44	4.75	Taper
3202-Y-7877	3202-M-4121	1.57	29.12	1.75-34	2.34	5.58	8	.44	4.75	Taper
3202-P-8050	3202-G-4141	1.57	38.34	1.75-34	2.34	5.72	8	.57	4.75	Taper

* All axle shafts are less lube holes. All axle shafts (except 3202-H-5520) are less puller holes

AXLE SHAFT ASSEMBLIES

F SERIES
F-106, F-140, F-145, F-146, F-149

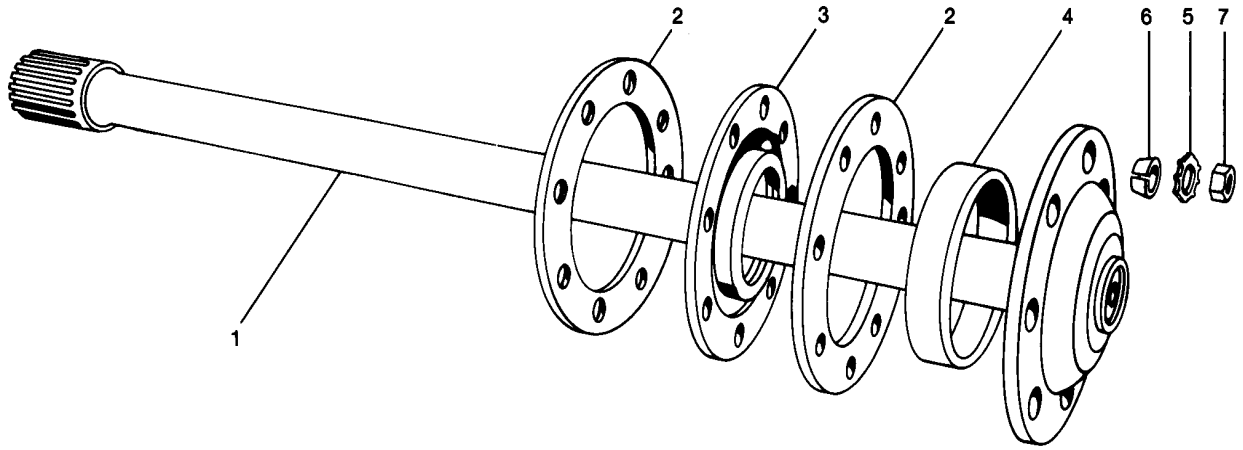

ITEM	DESCRIPTION	QTY	PART NO.	REMARKS
1	Axle shaft	2	**See following charts**	
2	Gasket	2	**2208-U-411**	
3	Oil Seal	2	**A-1205-L-740**	
4	Wiper	2	**A-1199-Q-1785**	
5	Dowel	16	**1246-Z-1170**	
6	Washer, shakeproof	16	**1229-U-515Z**	
7	Nut	16	**N-17**	

F-106

PART NUMBER *	FORGING NUMBER	BODY DIA. (IN.)	LENGTH (IN.)	SPLINE SIZE (IN.)	SPLINE LENGTH (IN.)	FLANGE DIA. (IN.)	NUMBER OF HOLES	HOLE SIZE (IN.)	BOLT CIRCLE (IN.)	HOLE TYPE
3202-D-2942	3202-C-2941	1.62	37.27	1.77-19	2.56	6.13	8	.44	5.13	Taper
3202-B-5228	3202-J-5106	1.62	38.12	1.77-19	2.56	6.13	8	.44	5.13	Taper
3202-P-7816	3202-J-5106	1.62	38.03	1.75-34	2.34	6.13	8	.44	5.13	Taper
3202-Q-8051	3202-L-8410	1.62	38.12	1.75-34	2.34	6.25	8	.57	5.31	Taper
3202-Q-8389	3202-L-8410	1.62	38.12	1.75-34	2.34	6.25	8	.50	5.31	Taper

F-140

PART NUMBER *	FORGING NUMBER	BODY DIA. (IN.)	LENGTH (IN.)	SPLINE SIZE (IN.)	SPLINE LENGTH (IN.)	FLANGE DIA. (IN.)	NUMBER OF HOLES	HOLE SIZE (IN.)	BOLT CIRCLE (IN.)	HOLE TYPE
3202-D-2942	3202-C-2941	1.62	37.27	1.77-19	2.56	6.13	8	.44	5.13	Taper
3202-G-3075	3202-F-3074	1.62	34.93	1.77-19	2.56	6.13	8	.44	5.13	Taper

* Less lube and puller holes.

F SERIES
F-106, F-140, F-145, F-146, F-149 (Continued)

F-145

PART NUMBER *	FORGING NUMBER	BODY DIA. (IN.)	LENGTH (IN.)	SPLINE SIZE (IN.)	SPLINE LENGTH (IN.)	FLANGE DIA. (IN.)	NUMBER OF HOLES	HOLE SIZE (IN.)	BOLT CIRCLE (IN.)	HOLE TYPE
3202-D-2942	3202-C-2941	1.62	37.27	1.77-19	2.56	6.13	8	.44	5.13	Taper
3202-G-3075	3202-F-3074	1.62	34.93	1.77-19	2.56	6.13	8	.44	5.13	Taper
3202-B-3720	3202-A-3719	1.62	29.62	1.77-19	2.56	6.13	8	.44	5.13	Taper
3202-W-3741	3202-V-3740	1.62	30.37	1.77-19	2.56	6.13	8	.44	5.13	Taper

F-146

PART NUMBER *	FORGING NUMBER	BODY DIA. (IN.)	LENGTH (IN.)	SPLINE SIZE (IN.)	SPLINE LENGTH (IN.)	FLANGE DIA. (IN.)	NUMBER OF HOLES	HOLE SIZE (IN.)	BOLT CIRCLE (IN.)	HOLE TYPE
3202-D-2942	3202-C-2941	1.62	37.27	1.77-19	2.56	6.13	8	.44	5.13	Taper
3202-G-3075	3202-F-3074	1.62	34.93	1.77-19	2.56	6.13	8	.44	5.13	Taper
3202-B-3720	3202-A-3719	1.62	29.62	1.77-19	2.56	6.13	8	.44	5.13	Taper
3202-W-3741	3202-V-3740	1.62	30.37	1.77-19	2.56	6.13	8	.44	5.13	Taper
3202-B-5228	3202-J-5106	1.62	38.12	1.77-19	2.56	6.13	8	.44	5.13	Taper
3202-P-7816	3202-J-5106	1.62	38.03	1.75-34	2.34	6.13	8	.44	5.13	Taper
3202-K-7837	3202-F-3074	1.62	34.93	1.75-34	2.34	6.13	8	.44	5.13	Taper
3202-N-7840	3202-V-3740	1.62	30.37	1.75-34	2.34	6.13	8	.44	5.13	Taper

F-149

PART NUMBER *	FORGING NUMBER	BODY DIA. (IN.)	LENGTH (IN.)	SPLINE SIZE (IN.)	SPLINE LENGTH (IN.)	FLANGE DIA. (IN.)	NUMBER OF HOLES	HOLE SIZE (IN.)	BOLT CIRCLE (IN.)	HOLE TYPE
3202-G-3075	3202-F-3074	1.62	34.93	1.77-19	2.56	6.13	8	.44	5.13	Taper
3202-W-3741	3202-V-3740	1.62	30.37	1.77-19	2.56	6.13	8	.44	5.13	Taper
3202-B-5228	3202-J-5106	1.62	38.12	1.77-19	2.56	6.13	8	.44	5.13	Taper

* Less lube and puller holes.

AXLE SHAFT ASSEMBLIES

H-172 SERIES

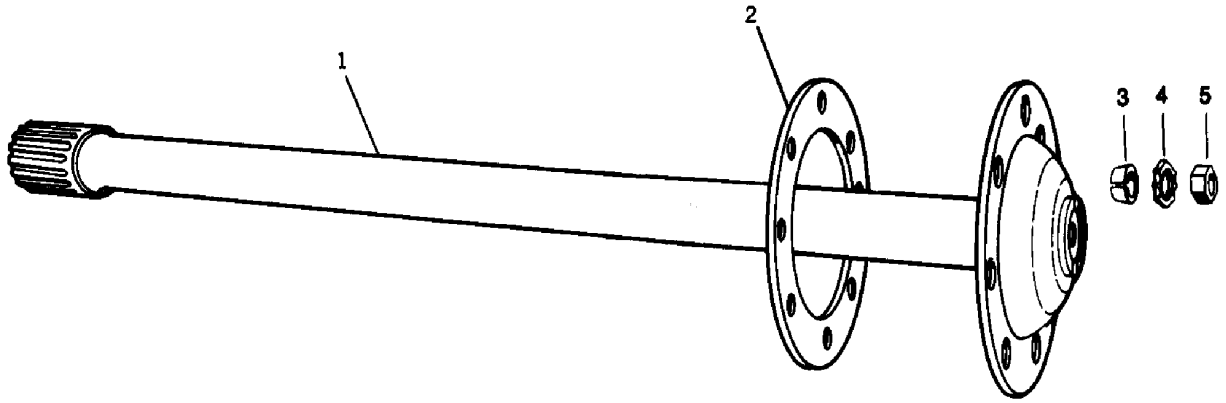

ITEM	DESCRIPTION	QTY	PART NO.	REMARKS
1	Axle shaft	---	**As specified**	See chart below
2	Gasket	2	**2208-J-426**	8 Hole pattern
		2	**2208-J-582**	16 Hole pattern
3	Dowel	16	**1246-A-1171**	
4	Washer-shakeproof	or	**1229-V-516**	
5	Nut	32 (1)	**NL-18-1**	

PART NUMBER *	FORGING NUMBER	BODY DIA. (IN.)	LENGTH (IN.)	SPLINE SIZE (IN.)	SPLINE LENGTH (IN.)	FLANGE DIA. (IN.)	NUMBER OF HOLES	HOLE SIZE (IN.)	BOLT CIRCLE (IN.)	HOLE TYPE
3202-D-6712	3202-C-6711	1.88	38.75	2.00-39	3.34	6.25	8	.50	5.31	Taper
3202-X-6732	3202-G-6741	1.88	34.15	2.00-39	3.34	6.25	16	.50	5.31	Taper
3202-Z-6734	3202-Y-6733	1.88	38.65	2.00-39	3.34	6.25	16	.50	5.31	Taper
3202-D-6738	3202-C-6737	1.88	35.53	2.00-39	3.34	6.25	16	.50	5.31	Taper
3202-J-6744	3202-F-6740	1.88	38.31	2.00-39	3.34	6.25	8	.50	5.31	Taper
3202-M-6747	3202-L-6746	1.88	33.40	2.00-39	3.34	6.25	16	.50	5.31	Taper
3202-S-7975 (3)	3202-C-6711	1.88	38.75	2.00-39	3.34	6.25	8	.50	5.31	Taper
3202-T-8002	3202-C-6737	1.88	35.53	2.00-39	3.34	6.25	8	.50	5.31	Taper
3202-J-8070	3202-K-4275	1.88	38.15	2.00-39	3.34	6.25	8	.57	5.31	Taper
3202-G-8405	3202-N-3810	1.88	37.15	2.00-39	3.34	6.25	8	.50	5.31	Taper

* Less lube hole and puller holes.

(1) Quantities are based on number of holes in the axle shafts. For all other information, refer to axle specifications.

(3) Same as 3202-D-6712 except hole taper (28°)

H-173 & L-172/173 SERIES

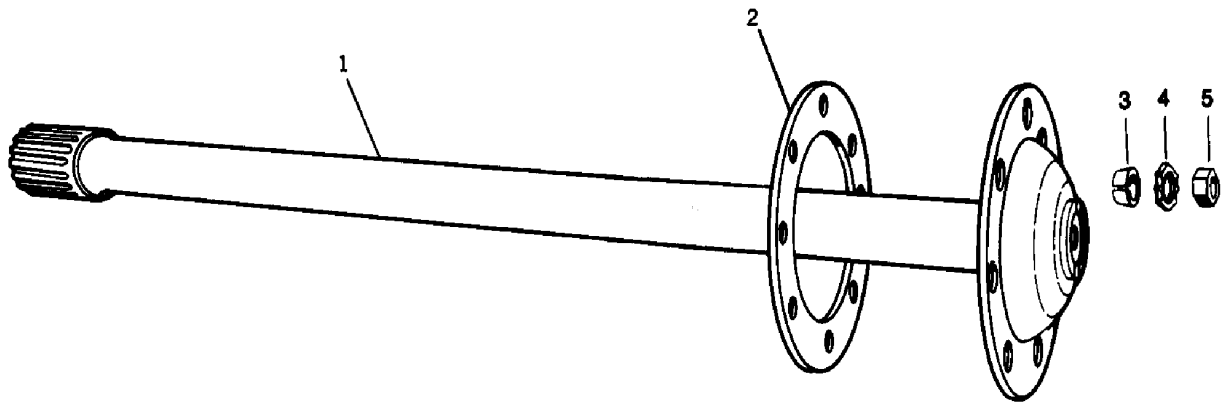

ITEM	DESCRIPTION	QTY	PART NO.	REMARKS
1	Axle shaft	2	**3202-F-7572**	See chart below
2	Gasket	2	**2208-H-476**	12 Hole pattern
3	Dowel	24	**1246-A-1171**	
4	Washer-shakeproof	24	**1229-V-516**	
5	Nut	24	**NL-18-1**	

PART NUMBER *	FORGING NUMBER	BODY DIA. (IN.)	LENGTH (IN.)	SPLINE SIZE (IN.)	SPLINE LENGTH (IN.)	FLANGE DIA. (IN.)	NUMBER OF HOLES	HOLE SIZE (IN.)	BOLT CIRCLE (IN.)	HOLE TYPE
3202-F-7572	3202-E-7571	1.88	40.84	2.00-39	3.34	6.25	12	.50	5.25	Taper

* Less lube hole and puller holes.

AXLE SHAFT ASSEMBLIES

P-174 SERIES

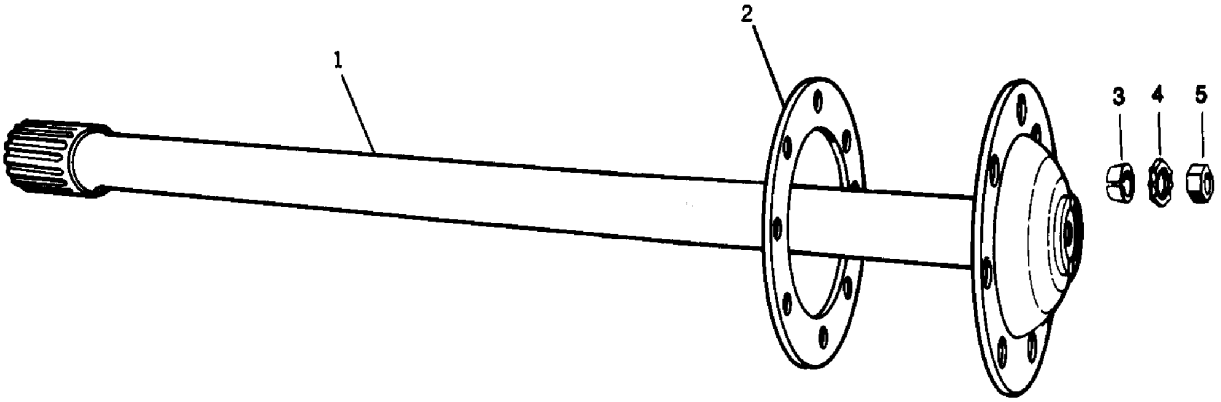

ITEM	DESCRIPTION		QTY	PART NO.	REMARKS
1	Axle shaft	L.H. - short	1	**3202-Z-8788**	See chart below
		R.H. - long	--	**No Longer Available**	
2	Gasket		2	**2208-X-440**	
3	Dowel		16	**1246-D-290**	
4	Shake proof washer		16	**1229-X-518**	
5	Nut		16	**N-110-1**	

PART NUMBER *	FORGING NUMBER	BODY DIA. (IN.)	LENGTH (IN.)	SPLINE SIZE (IN.)	SPLINE LENGTH (IN.)	FLANGE DIA. (IN.)	NUMBER OF HOLES	HOLE SIZE (IN.)	BOLT CIRCLE (IN.)	HOLE TYPE
3202-Z-8788	3202-Y-8787	2.00	40.18	2.10-41	2.62	8.38	8	.73	7.00	Taper

* Less lube hole and puller holes.

R-170, S-170 SERIES

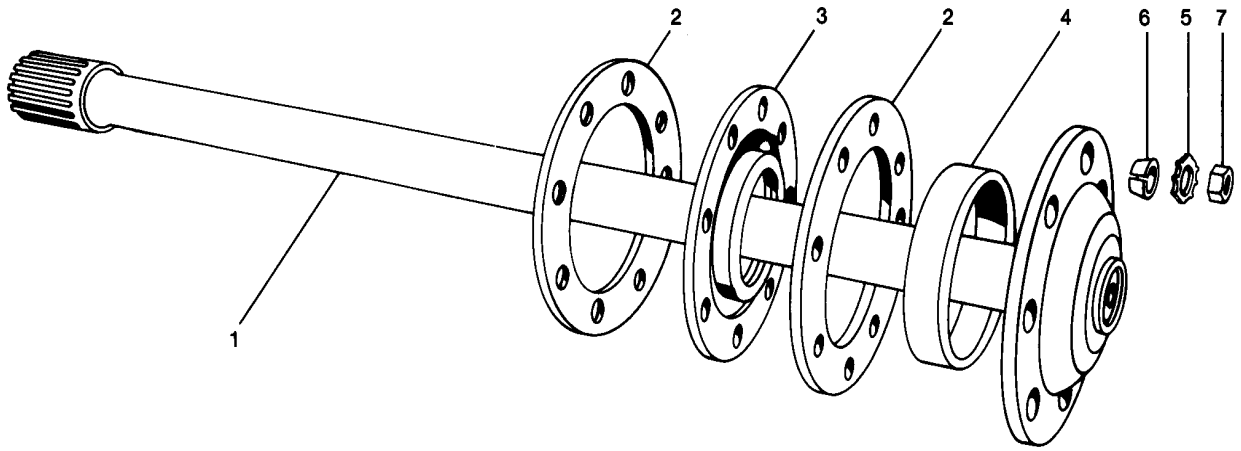

ITEM	DESCRIPTION	QTY	PART NO.	REMARKS
1	Axle shaft	2	**See chart below**	
2	Gasket	2	**2208-X-440**	
		4		Use with old construction.
3	Oil seal	2	**A-1205-N-612**	Grease lube wheel ends only.
4	Wiper	2	**A-1199-S-1917**	
5	Shake proof washer	16	**1229-X-518**	
6	Dowel	16	**1246-D-290**	
7	Nut	16	**N-110-1**	

PART NUMBER *	FORGING NUMBER	BODY DIA. (IN.)	LENGTH (IN.)	SPLINE SIZE (IN.)	SPLINE LENGTH (IN.)	FLANGE DIA. (IN.)	NUMBER OF HOLES	HOLE SIZE (IN.)	BOLT CIRCLE (IN.)	HOLE TYPE
3202-C-8141	3202-P-8258	2.25	39.96	2.38-24	3.43	8.38	8	.78	7.00	Straight
3202-V-6054	3202-U-6053	2.25	39.22	2.38-24	3.43	8.38	8	.73	7.00	Taper
3202-X-3508	3202-M-4303	2.25	40.47	2.38-24	3.43	8.38	8	.73	7.00	Taper
3202-X-6056	3202-W-6055	2.25	41.72	2.38-24	3.43	8.38	8	.73	7.00	Taper

* All parts less lube hole and puller holes.

AXLE SHAFT ASSEMBLIES

SL/SQHD FAMILY

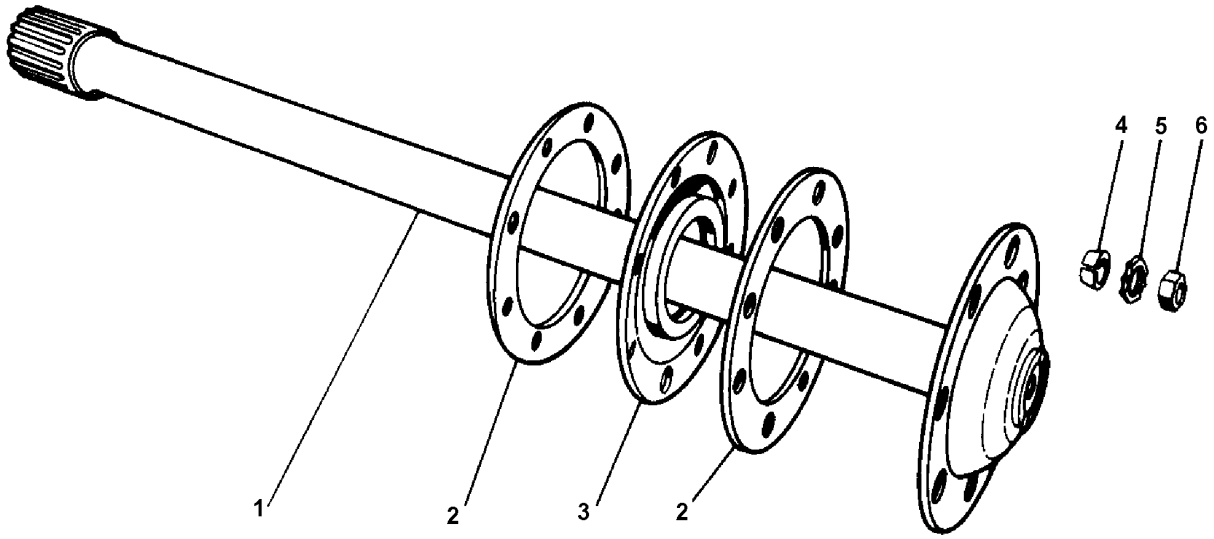

ITEM	DESCRIPTION	MODEL	QTY	PART NO.
1	Axle shaft	SLHD, SQHD	2	**See Chart Below**
2	Gasket	SLHD	2	**2208-H-476**
		SQHD	4	**2208-X-440**
3	Grease seal-outer	SQHD	2	**A-1205-N-612**
3A	Wiper-outer (used with grease seals only)	SQHD	2	**A-1199-S-1917**
4	Dowel	SLHD	24	**1246-A-1171**
		SQHD	16	**1246-D-290**
5	Washer-shakeproof	SLHD	24	**1229-C-1511**
		SQHD	16	**1229-X-518**
6	Nut	SLHD	24	**NL-18-1**
		SQHD	16	**N-110-1**

SLHD

PART NUMBER *	FORGING NUMBER	BODY DIA. (IN.)	LENGTH (IN.)	SPLINE SIZE (IN.)	SPLINE LENGTH (IN.)	FLANGE DIA. (IN.)	NUMBER OF HOLES	HOLE SIZE (IN.)	BOLT CIRCLE (IN.)	HOLE TYPE
3202-X-6472	3202-W-6549	1.88	40.09	2.00-21	2.59	6.25	12	.50	5.25	Taper

SQHD

PART NUMBER *	FORGING NUMBER	BODY DIA. (IN.)	LENGTH (IN.)	SPLINE SIZE (IN.)	SPLINE LENGTH (IN.)	FLANGE DIA. (IN.)	NUMBER OF HOLES	HOLE SIZE (IN.)	BOLT CIRCLE (IN.)	HOLE TYPE
3202-R-3268	3202-Y-4783	2.00	40.47	2.12-22	2.71	8.38	8	.73	7.00	Taper

* Less lube hole and puller holes.

SL/SQ100 FAMILY

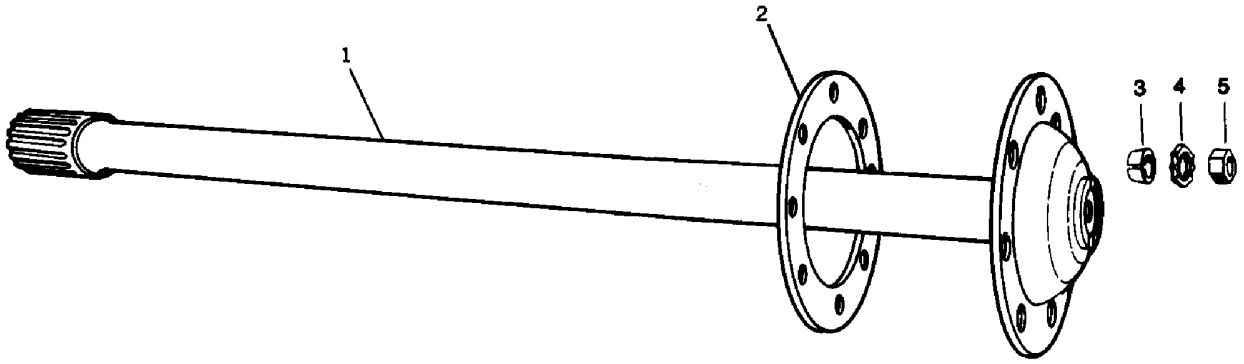

ITEM	DESCRIPTION	MODEL	QTY. PER AXLE	PART NO.
1	Axle shafts	SQHP, SQ-100/P, SQR-100/P, SL-100/P	As specified	**See chart below.**
2	Gasket	SQHP	4	**2208-X-440**
		SQ-100/P, SQR-100/P	2	
		SL-100/P	2	**2208-H-476**
3	Dowel	SQHP, SQ-100/P, SQR-100/P	16	**1246-D-290**
		SL-100/P	24	**1246-A-1171**
4	Washer-shake proof	SQHP, SQ-100/P, SQR-100/P	16	**1229-X-518**
4A	Washer-flat (not shown)	SL-100/P	24	**1229-C-1511**
5	Nut	SQHP, SQ-100/P, SQR-100/P	16	**N-110-1**
		SL-100/P	24	**NL-18-1**

QHP, QD, QP, QRD

PART NUMBER *	FORGING NUMBER	BODY DIA. (IN.)	LENGTH (IN.)	SPLINE SIZE (IN.)	SPLINE LENGTH (IN.)	FLANGE DIA. (IN.)	NUMBER OF HOLES	HOLE SIZE (IN.)	BOLT CIRCLE (IN.)	HOLE TYPE
3202-C-4553	3202-B-4552	2.00	37.60	2.10-41	2.62	7.50	12	.62	6.50	Both
3202-E-4555	3202-D-4554	2.00	41.72	2.10-41	2.62	7.50	12	.62	6.50	Both
3202-L-6356	3202-K-6355	2.00	38.29	2.10-41	2.62	8.38	8	.73	7.00	Taper
3202-N-6358	3202-M-6357	2.00	42.41	2.10-41	2.62	8.38	8	.73	7.00	Taper

LD, LP, LR

PART NUMBER *	FORGING NUMBER	BODY DIA. (IN.)	LENGTH (IN.)	SPLINE SIZE (IN.)	SPLINE LENGTH (IN.)	FLANGE DIA. (IN.)	NUMBER OF HOLES	HOLE SIZE (IN.)	BOLT CIRCLE (IN.)	HOLE TYPE
3202-Q-8181	3202-N-8178	1.88	42.21	2.00-39	2.69	6.25	12	.50	5.25	Taper
3202-R-8182	3202-P-8180	1.88	38.21	2.00-39	2.69	6.25	12	.50	5.25	Taper

* Less lube hole and puller holes.

AXLE SHAFT ASSEMBLIES

SSHD FAMILY

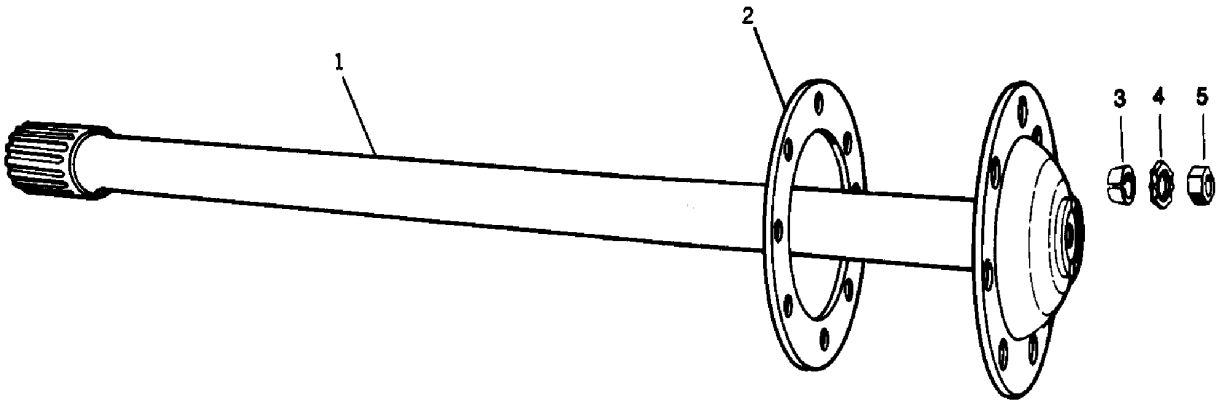

ITEM	DESCRIPTION	QTY	PART NO.	REMARKS
1	Axle shaft	2	**See chart below**	
2	Gasket	2	**2208-X-440**	
3	Dowel	16	**1246-D-290**	
4	Washer, shakeproof	16	**1229-X-518**	
5	Nut	16	**N-110-1**	

PART NUMBER *	FORGING NUMBER	BODY DIA. (IN.)	LENGTH (IN.)	SPLINE SIZE (IN.)	SPLINE LENGTH (IN.)	FLANGE DIA. (IN.)	NUMBER OF HOLES	HOLE SIZE (IN.)	BOLT CIRCLE (IN.)	HOLE TYPE
3202-W-3039	3202-K-4301	2.12	43.34	2.25-23	3.03	8.38	8	.73	7.00	Taper
3202-A-3459	3202-X-4054	2.12	38.40	2.25-23	3.03	8.38	8	.73	7.00	Taper
3202-P-3500	3202-M-3497	2.25	45.03	2.38-24	3.03	8.38	8	.73	7.00	Taper
3202-B-3512	3202-R-4308	2.25	39.34	2.38-24	3.03	8.38	8	.73	7.00	Taper
3202-T-6728	3202-M-4017	2.12	43.03	2.38-24	3.03	8.38	8	.73	7.00	Taper
3202-U-6729	3202-A-4005	2.12	37.87	2.38-24	3.03	8.38	8	.73	7.00	Taper
3202-Z-7384	3202-Y-7383	2.25	38.56	2.38-24	3.03	8.38	8	.73	7.00	Taper
3202-C-7387	3202-B-7386	2.25	44.40	2.38-24	3.03	8.38	8	.73	7.00	Taper
3202-G-7625	3202-F-4036	2.12	45.97	2.38-24	3.03	8.38	8	.73	7.00	Taper
3202-H-7626	3202-H-4012	2.12	40.94	2.38-24	3.03	8.38	8	.73	7.00	Taper

* All parts less lube hole and puller holes.

SECTION 4

INDEX

Drive Gear & Pinion Assemblies **Page**

C Series..... 4-2
D Series..... 4-2
F Series..... 4-3
H-172 Series..... 4-3
H-173 Series..... 4-3
L-172 Series..... 4-4
L-173 Series..... 4-4
P-174 Series 4-4
R/S-170 Series..... 4-5
SL/SQHD Family..... 4-5
SL/SQ-100 Family..... 4-7
SSHD Family..... 4-8

DRIVE GEAR & PINION ASSEMBLIES

C SERIES (1-3/8"-10 SPLINE)

PART NUMBER	RATIO		MODEL
A-37162-2	FAST	3.70	C100
A-38712-1 (2)		3.70	C102/C103
A-40944-1 (2)		4.10	C102/C103
A-36352-3		4.11	C100
A-38714-1 (2)		4.11	C102/C103
A-36118-2		4.33	C100
A-38716-1 (2)		4.33	C102/C103
A-40538-1 (2)		4.56	C102/C103
A-40538-3 (2)		4.56	C102/C103
A-40754-1	STANDARD	5.13	C102/C103
A-40754-3 (2)		5.13	C102/C103
A-35430-2		5.29	C100
A-38718-1		5.29	C102/C103
A-38720-1 (2)		5.83	C102/C103
A-35428-2 (2)		6.20	C100
A-38722-1 (2)		6.20	C102/C103
A-35426-1 (6)		6.80	C100
A-38734-1 (2)		6.80	C102/C103
A-38736-1 (2)		7.20	C102/C103

D SERIES (1-3/8"-10 SPLINE)

PART NUMBER	RATIO		BEARING I.D.
A-37710-1 (2)	FAST	4.33	.985
A-37710-3		4.33	1.09
A-37708-2 (2)	STANDARD	4.88	.985
A-37708-3 (2)		4.88	1.09
A-35798-3		5.29	.985
A-35514-6		5.83	.985
A-35514-7		5.83	1.09
A-35512-5		6.20	1.09
A-35512-6 (2)		6.20	.985
A-35510-5 (2)		6.80	.985
A-35510-7		6.80	1.09
A-35780-4 (2)		7.20	.985
A-35780-6		7.20	1.09
A-35634-6		7.80	1.09
A-35634-8 (2)		7.80	.985

(2) No longer available

(6) Contact Specifications for replacement information (888-725-9355)

F SERIES (1-1/2"-10 SPLINE)

PART NUMBER	RATIO	
A-37428-2	FAST	4.63
A-38278-1 (2)		4.88
A-35710-3	STANDARD	5.29
A-38280-2 (2)		5.57
A-36162-2		5.83
A-38128-1		6.14
A-35540-8 (2)		6.20
A-35538-10		6.80
A-38126-1		6.83
A-38124-1		7.17
A-35536-9		7.20
A-35636-6		7.80

H-172 SERIES (1-3/4"-34 SPLINE)

PART NUMBER	RATIO	
A-37960-2	*	3.73
A-38048-2	FAST	4.10
A-38816-1	STANDARD	4.56
A-39206-1		4.88
A-35776-9		5.29
A-38818-1		5.38
A-38790-1		5.86
A-38756-1		6.14
A-35774-12		6.83
A-37944-4		7.17
A-36768-7		7.80
A-36044-3		8.20

H-173 SERIES (1-3/4"-34 SPLINE)

PART NUMBER	RATIO	
A-37960-2	*	3.73
A-38048-2	FAST	4.10
A-38816-1	STANDARD	4.56
A-39206-1		4.88
A-35776-9		5.29
A-38818-1 (2)		5.38
A-38790-1		5.86
A-38756-1		6.14
A-35774-12		6.83
A-37944-4		7.17
A-36768-7 (2)		7.80
A-36044-3		8.20

(2) No longer available

* Special differential cases, contact Specifications Dept., Florence, KY. (888-725-9355)

DRIVE GEAR & PINION ASSEMBLIES

L-172 SERIES (1-3/4"-34 SPLINE)

PART NUMBER	RATIO	
A-37960-2	*	3.73
A-38048-2	FAST	4.10
A-38816-1	STANDARD	4.56
A-39206-1		4.88
A-35776-9		5.29
A-38818-1 (2)		5.38
A-38790-1		5.86
A-38756-1		6.14
A-35774-12		6.83
A-37944-4		7.17
A-36768-7 (2)		7.80
A-36044-3		8.20

L-173 SERIES (1-3/4"-34 SPLINE)

PART NUMBER	RATIO	
A-37960-2	*	3.73
A-38048-2	FAST	4.10
A-38816-1	STANDARD	4.56
A-39206-1		4.88
A-35776-9		5.29
A-38818-1 (2)		5.38
A-38790-1		5.86
A-38756-1		6.14
A-35774-12		6.83
A-37944-4		7.17
A-36768-7 (2)		7.80
A-36044-3		8.20

P-174 SERIES (1-3/4"-34 SPLINE)

PART NUMBER	RATIO
A-38816-1	4.56
A-39206-1	4.88
A-38818-1 (2)	5.38
A-38790-1	5.86
A-38756-1	6.14
A-35774-12	6.83
A-37944-4	7.17
A-36768-7 (2)	7.80
A-36044-3	8.20

(2) No longer available

* Special differential cases, contact Specifications Dept., Florence, KY. (888-725-9355)

R/S-170 SERIES (2-1/4"-10 SPLINE)

PART NUMBER	RATIO	
A-36766	FAST	3.42
A-38496		3.55
A-35954		3.70
A-38004		3.90
A-35978		4.11
A-35972	STANDARD	4.33
A-35970		4.63
A-36134		4.88
A-36036		5.29
A-38724 (2)		5.57
A-36054 (2)		5.86
A-35968		6.14
A-36102		6.83
A-36100		7.40

SL/SQHD FORWARD-REAR CARRIER (1-3/4"-10 SPLINE) (3200-T-800 & 3200-U-801 ALUMINUM)

DRIVE GEAR AND PINION ASSY.	DRIVE GEAR, PINION & HELICAL GEAR ASSY.	RATIO	REMARKS
A-36028-20 (2)	A-36028-21 (2)	3.55	FAST RATIOS Use Differential Case Assembly A83-3235-V-620
A-37588-12 (2)	A-37588-13 (2)	3.70	
A-38006-9	A-38006-10	3.90	
A-35818-23 (2)	A-35818-24 (2)	4.11	
A-36722-12 (2)	A-36722-13	4.33	
A-35816-19 (2)	A-35816-20 (2)	4.44	
A-35814-16 (2)	A-35814-17 (2)	4.63	
A-36446-15 (2)	A-36446-16 (2)	4.88	STANDARD RATIOS Use Differential Case Assembly B3-3235-U-619
A-35812-20 (2)	A-35812-21 (2)	5.29	
A-35810-19 (2)	A-35810-20 (2)	5.83	
A-35808-22 (2)	A-35808-23	6.17	
A-35806-21 (2)	A-35806-22 (2)	6.83	
A-35804-22 (2)	A-35804-23 (2)	7.20	
A-35802-17 (2)	A-35802-18 (2)	7.80	
A-35800-17 (2)	A-35800-18 (2)	8.60	

(2) No longer available

DRIVE GEAR & PINION ASSEMBLIES

SL/SQHD REAR-REAR CARRIER (1-3/4"-10 SPLINE) (3200-C-393 & 3200-R-616 ALUMINUM)

PART NUMBER	RATIO		REMARKS
A-36028-18	FAST	3.55	Use Diff. Case Assembly A83-3235-V-620
A-37588-10		3.70	
A-38006-3 (2)		3.90	
A-35818-20 (2)		4.11	
A-36722-10 (2)		4.33	
A-35816-17 (2)		4.44	
A-35814-14 (2)		4.63	
A-36446-13 (2)	STANDARD	4.88	Use Diff. Case Assembly B3-3235-U-619
A-35812-18 (2)		5.29	
A-35810-17		5.83	
A-35808-19 (2)		6.17	
A-35806-19 (2)		6.83	
A-35804-19 (2)		7.20	
A-35802-15 (2)		7.80	
A-35800-14 (2)		8.60	

(2) No longer available

SL/SQ-100 FAMILY (2"-39 SPLINE)

PART NUMBER	RATIOS		AXLE
A-41814-1 **	FAST	3.42	ALL QHP, QD/QP, LD/LP-100 FORWARD - REAR
A-37278-2		3.55	
A-37596-2 *		3.70 *	
A-41816-1 *		3.73 *	
A-38002-1		3.90	
A-37494-2	MEDIUM	4.10	
A-37404-1		4.33	
A-37530-2		4.44	
A-37540-2		4.63	
A-37398-1	STANDARD	4.88	QRD RATIOS 3.42 to 5.86
A-37396-2		5.29	
A-37394-1		5.86	
A-38242-1		6.14	
A-38240-1		6.83	
A-38834-1		7.17	
A-37258-2		7.80	
A-37594-3	FAST	3.55	QAR ONLY REAR - REAR
A-37598-3 *		3.70 *	
A-39166-1 * (2)		3.73 *	
A-38000-3		3.90	
A-38758-1 (2)	MEDIUM	4.10	NOTE: See SECTION 6, to update original design carrier to current design carrier. KIT 1570 or a 1390 series KIT is required. The pinion spline change requires a new yoke, see SECTION 4.
A-37542-3		4.33	
A-37532-3		4.44	
A-37534-3		4.63	
A-37544-3	STANDARD	4.88	
A-37536-3		5.29	
A-38826-1 (2)		6.14	
A-38246-1 (2)		6.83	
A-41818-1 **	FAST	3.42	LR/QR-100/P REAR - REAR
A-37326-1		3.55	
A-38512-1 *		3.70 *	
A-41820-1 *		3.73 *	
A-38520-1		3.90	
A-37562-1	MEDIUM	4.10	
A-37382-1		4.33	
A-37564-1		4.44	
A-37566-1		4.63	
A-37392-1	STANDARD	4.88	QRR RATIOS 3.42 to 5.86
A-37376-1		5.29	
A-37374-1		5.86	
A-38524-1		6.14	
A-38526-1		6.83	
A-37308-1		7.17	
A-37306-2		7.80	

* Non-interchangeable. 3.70 or 3.73 ratios must be the same for both Forward-Rear and Rear-Rear axle ratios. (Example: 3.73 Forward-Rear and 3.73 Rear-Rear)

** Available for SQ-100/P and SL-100/P only (with or without pump).

DRIVE GEAR & PINION ASSEMBLIES

SSHD FAMILY (ALL MODELS FORWARD-REAR) (2-5/8"-26 SPLINE) (EXCEPT PUMP VERSION) (3)

PART NUMBER	RATIOS		AXLE
A-40160-1 (2)	FAST	3.73	SHD, THD, and UHD
A-40162-1		3.90	
A-40164-1		4.10	
A-40170-1		4.30	
A-40036-1		4.56	
A-40172-1		4.63	
A-40176-1	STANDARD	4.89	
A-40178-1		5.29	
A-40046-1		5.38	
A-40180-1 (2)		5.57	
A-40182-1		6.14	
A-40306-1		6.83	
A-40502-1		7.40	

SSHD FAMILY (FORWARD-REAR) (2-5/8"-26 SPLINE) USE WITH EXTERNAL PUMP ONLY. (3200-M-1235 CARRIERS) (4)

PART NO.	RATIOS		AXLE
A-40162-3 (2)	FAST	3.90	SHP (use with Pump)
A-40164-3 (2)		4.11	
A-40172-3 (2)		4.63	
A-40178-3 (2)	STANDARD	5.29	
A-40182-9 (2)		6.17	
A-40306-3 (2)		6.83	
A-40502-3 (2)		7.40	

(2) No longer available

(3) NOTE: For gear set used on pump version, see SHP Drive Gear & Pinion Assemblies.

(4) NOTE: The above gear sets are to be used with the optional oil pump only, and are not interchangeable with 3200-R-1162 or 3200-P-1420 carrier.

SSHD FAMILY (ALL MODELS REAR-REAR) (2"-39 SPLINE)

PART NUMBER	RATIOS		AXLE
A-40504-1 (2)	FAST	3.73	All Models Rear-Rear SHR, THR & UHR
A-40534-1		3.90	
A-40536-1		4.10	
A-40542-1		4.30	
A-40074-1		4.56	
A-40544-1		4.63	
A-40546-1	STANDARD	4.89	
A-40674-1		5.29	
A-40088-1		5.38	
A-40676-1		5.57	
A-40678-1		6.14	
A-40680-1		6.83	
A-40682-1		7.40	

SSHD FAMILY (ALL MODELS REAR-REAR) (1-31/32"-10 SPLINE) (ORIGINAL 3200-H-606)

PART NUMBER	RATIOS		AXLE
A-40536-3 (2)	FAST	4.11	All Models Rear-Rear SHR, THR & UHR
A-40542-3 (2)		4.33	
A-40544-3 (2)		4.63	
A-40546-3 (2)	STANDARD	4.89	
A-40674-6		5.29	
A-40676-3 (2)		5.57	
A-40678-3		6.17	
A-40680-6 (2)		6.83	
A-40682-5		7.40	

(2) No longer available

SECTION 5

INDEX

Yoke Assemblies **Page**

C Series..... 5-2
D & F Series..... 5-2
H-172/173, L-172/173 Series..... 5-3
P-174 Series 5-3
R/S-170 Series..... 5-3
SL/SQHD Family..... 5-4
SL/SQ-100 Family..... 5-5
SSHD Family..... 5-6

YOKE ASSEMBLIES

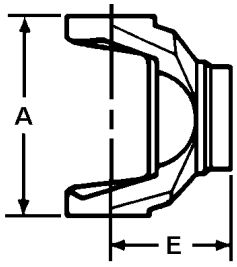

Type 1

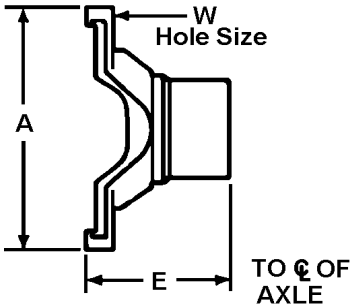

Type 2

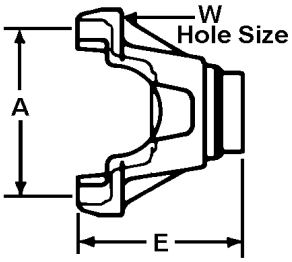

Type 3

C SERIES

SPLINE SIZE	SERIES	TYPE	A	E	W	PRODUCTION PART NUMBER	REPLACED BY SERVICE PART NUMBER
1-3/8"-10	135N	3	3-5/8"	3-1/2"	25/64" DR	A-3280-L-2040	---
	141N	3	4-3/16"	3-1/2"	5/16"-24 THD	A-3260-D-1330	**141TYS22A**
	141N	3	4-3/16"	3-1/2"	25/64" DR	A1-3280-E-2241	**141NYS22A1 (2)**
	148N	3	4-3/16"	4"	29/64" DR	A1-3280-W-2207 (2)	**148NYS22-1A1**

D SERIES

SPLINE SIZE	SERIES	TYPE	A	E	W	PRODUCTION PART NUMBER	REPLACED BY SERVICE PART NUMBER
1-3/8"-10	135N	3	3-5/8"	3-15/32"	25/64" DR	A2-3280-L-2040	---
	141N	3	4-3/16"	3-1/2"	25/64" DR	A4-3280-E-2241	**141NYS22A4 (2)**
	141N	3	4-3/16"	3-1/2"	21/64" DR	A-3280-G-8067	**141DYS22A (2)**
	148N	3	4-3/16"	4"	25/64" DR	A-3260-V-308	**148DYS22A**
	148N	3	4-3/16"	4"	29/64" DR	A2-3280-W-2207 (2)	**148NYS22-1A2**
	62N	2	5-27/32"	2-15/16"	3/8"-24 THD	A1-3897-X-1896	**62NYS22-9A**

F SERIES

SPLINE SIZE	SERIES	TYPE	A	E	W	PRODUCTION PART NUMBER	REPLACED BY SERVICE PART NUMBER
1-1/2"-10	135N	3	3-5/8"	3-29/32"	25/64" DR	A1-3280-A-1847	---
	141N	3	4-3/16"	3-7/8"	25/64" DR	A-3280-B-1848	**141NYS24A (2)**
	141N	3	4-3/16"	3-7/8"	21/64" DR	A-3280-K-8071	**141DYS24-2A (2)**
	148N	3	4-3/16"	4-13/32"	29/64" DR	A2-3280-X-2208 (2)	**148NYS24-11 (2)**
	155N	3	4-31/32"	4"	25/64" DR	A-3280-M-8073 (2)	**155DYS24-2A (2)**
	62N	2	5-27/32"	3-15/32"	3/8"-24 THD	A1-3280-C-2265	**62NYS24-17A1**
	62N	2	5-27/32"	3-15/16"	3/8"-24 THD	A-3260-N-92	**62NYS24-33A (2)**
	72N	2	6-7/32"	3-7/16"	15/32" DR	3280-U-2725	**72NYS24**

(2) No longer available

DR - Drilled THD - Threaded

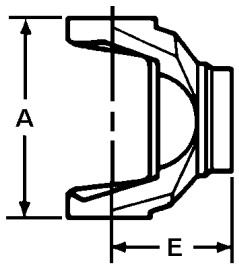

Type 1

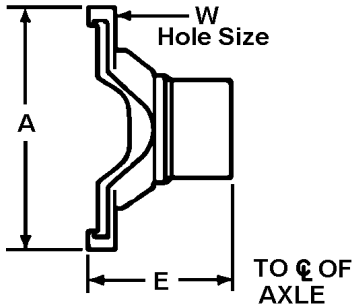

Type 2

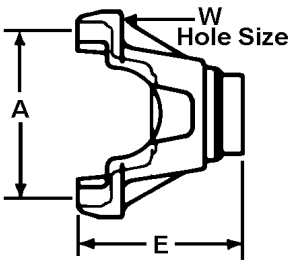

Type 3

H-172, H-173, L-172, L-173 & P-174 SERIES

SPLINE SIZE	SERIES	TYPE	A	E	W	PRODUCTION PART NUMBER	REPLACED BY SERVICE PART NUMBER
1-3/4"-34	2	52N	4-25/32"	3-5/8"	13/32" DR	A-3260-N-14	---
	2	62N	5-17/32"	3-5/16"	3/8"-24 THD	A-3260-Z-52	**62NYS28-160A**
	2	62N	5-17/32"	4-1/4"	3/8"-24 THD	A-3260-M-39	**62NYS28-155A**
	2	62N	5-17/32"	4-1/4"	13/32" DR	A-3280-A-6969	**62NYS28-154 (2)**
	2	72N	5-27/32"	3-3/4"	1/2"-20 THD	A-3260-F-32	**72NYS28-166A**
	2	72N	5-27/32"	3-3/4"	15/32" DR	A-3280-B-6970	**72NYS28-162A**
	3	141N	4-3/16"	4-7/32"	25/64" DR	A-3280-C-6971	**141NYS28A (2)**
	3	148N	4-3/16"	4-15/32"	15/32" DR	A-3280-D-6972	**148NYS28-9A (2)**
	3	155N	4-31/32"	4-21/32"	25/64" DR	A-3260-N-248	**155DYS28-1A**

R/S-170 SERIES

SPLINE SIZE	SERIES	TYPE	A	E	W	PRODUCTION PART NUMBER	REPLACED BY SERVICE PART NUMBER
2-1/4"-10	16N	1	5-5/16"	5-5/8"	---	A1-3280-X-3274	**16N-4-6891X**
	17N	1	6-3/32"	6-1/16"	---	A3-3280-E-1643	**17N-4-4411X**
	17N	1	6-3/32"	7-3/16"	---	A1-3280-H-4246	**17N-4-6891X**
	176N	1	7"	5-27/32"	---	A1-3260-Z-208	**176N-4-731X**
	18N	1	7-35/64"	5-27/32"	---	A1-3280-R-5452	**18N-4-2551X**
	155N	3	4-31/32"	5-1/32"	29/64" DR	A1-3280-E-6583	---
	72N	2	6-7/32"	4-1/4"	15/32" DR	A1-3280-W-1687	**72NYS36-40A1**
	72N	2	6-7/32"	4-1/4"	1/2"-20 THD	A2-3280-S-3581	**72NYS36-54A2**
	82N	2	8-1/2"	4-3/4"	1/2"-20 THD	A1-3280-M-3029	**82NYS36-26A1**

(2) No longer available

DR - Drilled THD - Threaded

YOKE ASSEMBLIES

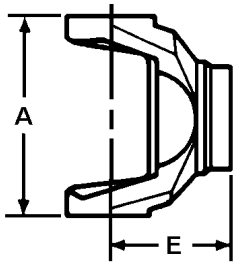

Type 1

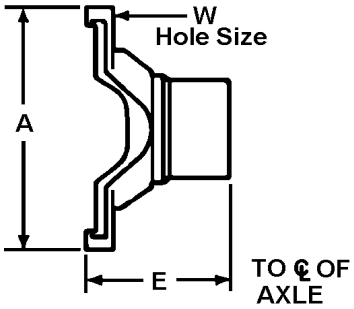

Type 2

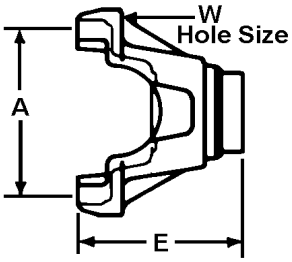

Type 3

SL/SQHD FAMILY (FORWARD-REAR INPUT YOKES FOR 3200-T-800)

SPLINE SIZE	SERIES	TYPE	A	E	W	PRODUCTION PART NUMBER	REPLACED BY SERVICE PART NUMBER
2"-10	16N	1	5-5/16"	5-3/16"	---	A-3280-P-2096	**16N-4-1631**
	17N	1	6-3/32"	5-3/16"	---	A1-3897-L-1000	**17N-4-4291X**

SL/SQHD FAMILY (FORWARD-REAR OUTPUT YOKES FOR 3200-T-800)

SPLINE SIZE	SERIES	TYPE	A	E	W	PRODUCTION PART NUMBER	REPLACED BY SERVICE PART NUMBER
1-3/4"-10	16N	1	5-5/16"	4-3/4"	---	3280-G-2269	**16N-4-1931**
	17N	1	6-3/32"	4-7/8"	---	3280-M-2223	**17N-4-2381**
	62N	2	5-17/32"	3-5/16"	3/8"-24 THD	3280-H-2270	**62NYS28-123**
	72N	2	5-27/32"	4"	15/32" DR	3280-G-2295	**72NYS28-7 (2)**
	155N	3	4-31/32"	4-11/16"	29/64" DR	3280-Y-2417 (2)	**155N-4-1981**

SL/SQHD FAMILY (REAR-REAR INPUT YOKES FOR 3200-C-393)

SPLINE SIZE	SERIES	TYPE	A	E	W	PRODUCTION PART NUMBER	REPLACED BY SERVICE PART NUMBER
1-3/4"-10	16N	1	5-5/16"	5"	---	A-3280-H-4038	**16N-4-3621**
	16N	1	5-5/16"	6"	---	A1-3280-Q-4047	**16N-4-3861**
	17N	1	6-3/32"	6-1/4"	---	A1-3280-S-4101	**17N-4-4091**

(2) No longer available

DR - Drilled THD - Threaded

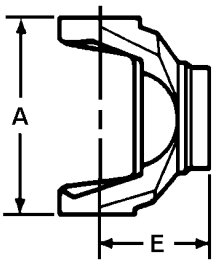

Type 1

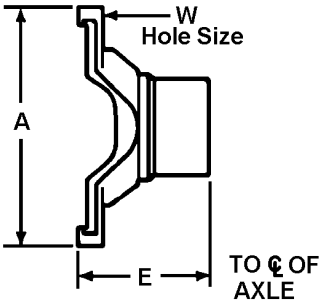

Type 2

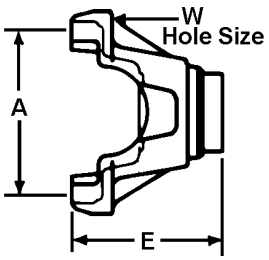

Type 3

SL/SQ-100 FAMILY

LOCATION-SPLINE SIZE	SERIES	TYPE	A	E	W	PRODUCTION PART NUMBER	REPLACED BY SERVICE PART NUMBER	USED IN QAR KIT
2"-39 Input at 1st rear axle	17N	1	6-3/32"	5-5/32"	---	A-3260-Q-121	**17N-4-6411X**	
	17N	1	6-3/32"	6-1/4"	---	A-3260-P-120	**17NYS32-99A**	
	176N	1	7"	5-3/16"	---	A-3260-K-115	**176N-4-541X**	
	18N	1	7-35/64"	5-3/16"	---	A-3260-L-116	**18N-4-3381X**	
	82N	2	8-1/2"	3-7/8"	1/2"-20 THD	A-3260-M-117	**82NYS32-74A**	
	92N	2	8-5/8"	4-1/4"	1/2"-20 THD	A-3260-N-118	**92NYS32-25A**	
1-3/4"-34 Output at 1st rear axle	16N	1	5-5/16"	5-7/16"	---	3260-T-124	**16N-4-6261**	
	16N	1	5-5/16"	6-1/32"	---	3260-U-125	**16N-4-6251**	
	17N	1	6-3/32"	4-7/8"	---	3260-V-126	**17N-4-6331**	
	17N	1	6-3/32"	5-31/32"	---	3260-W-127	**17N-4-6321**	
	72N	2	6-7/32"	3-5/8"	1/2"-20 THD	3260-X-128	**72NYS28-176**	
	72N	2	6-7/32"	4-11/16"	15/32" DR	3260-Y-129	**72NYS28-177**	
	82N	2	8-1/2"	3-7/8"	1/2"-20 THD	3260-Z-130	**82NYS28-36 (2)**	
	92N	2	8-5/8"	4-1/4"	17/32" DR	3260-A-131	**92NYS28-5**	
2"-39 Current Design Input at 2nd rear axle	16N	1	5-5/16"	5-35/64"	---	A-3260-G-111	**16N-4-6281X**	1398
	16N	1	5-5/16"	6-7/32"	---	A-3260-H-112	**16N-4-6291X**	1397
	17N	1	6-3/32"	5-5/32"	---	A1-3260-Q-121	**17NYS32-100A**	1394
	17N	1	6-3/32"	6-1/4"	---	A1-3260-P-120	**17N-4-6391X**	1395
	72N	2	6-7/32"	3-13/16"	1/2"-20 THD	A-3260-S-123	**72NYS32-244A**	1392
	72N	2	6-7/32"	4-7/8"	15/32" DR	A-3260-R-122	**72NYS32-245A (2)**	1393
	82N	2	8-1/2"	3-7/8"	1/2"-20 THD	A1-3260-M-117	**82NYS32-74A1**	1396
	92N	2	8-5/8"	4-7/16"	17/32" DR	A-3260-B-132	**92NYS32-26A**	1391

(2) No longer available

DR - Drilled THD - Threaded

YOKE ASSEMBLIES

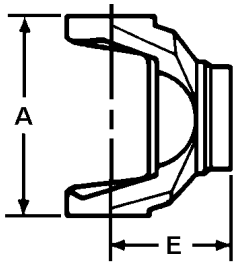

Type 1

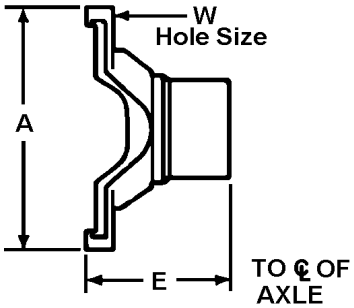

Type 2

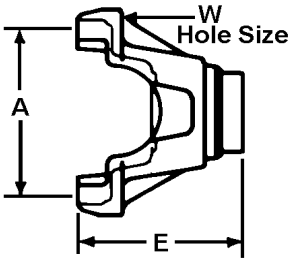

Type 3

SSHD FAMILY (FORWARD-REAR YOKES FOR 3200-R-1162 and 3200-P-1420 CARRIERS ONLY)

SPLINE SIZE	SERIES	TYPE	A	E	W	PRODUCTION PART NUMBER	REPLACED BY SERVICE PART NUMBER
INPUT YOKES 2-3/8"-46	17N	1	6-3/32"	5-11/16"		A-3280-U-6729	**17N-4-5461X**
	18N	1	7-35/64"	5-7/16"		A-3280-Z-6734	**18N-4-2711**
	82N	2	8-1/2"	4-9/16"	15/32" DR	A-3280-X-6732	**82NYS38-14A**
	82N	2	8-1/2"	4-9/16"	1/2"-20 THD	A-3280-A-6735	**82NYS38-15A**
	92N	2	8-5/8"	4"	1/2"-20 THD	A-3280-B-6736	**92NYS38-39A**
OUTPUT YOKES 2-1/32"-39	16N	1	5-5/16"	5-1/4"		A3-3280-U-6755	**16N-4-6951X**
	16N	1	5-5/16"	5-15/16"		A1-3260-R-18	**16N-4-6961X**
	17N	1	6-3/32"	6-1/2"		A1-3280-X-6758	**17NYS32-40A1**
	17N	1	6-3/32"	5-1/4"		A1-3280-T-6754	**17NYS32-41A1**
	72N	2	6-7/32"	3-7/8"	15/32" DR	A2-3280-F-6766	**72NYS32-219A**
	72N	2	6-7/32"	3-7/8"	1/2"-20 THD	A1-3280-B-6762	**72NYS32-220A**
	72N	2	6-7/32"	4-5/16"	1/2"-20 THD	A1-3280-W-6757	**72NYS32-221A (2)**
	72N	2	6-7/32"	4-5/16"	15/32" DR	A2-3280-V-6756	**72NYS32-222A1**
	82N	2	8-1/2"	3-7/8"	1/2"-20 THD	A1-3280-Z-6760 (2)	**82NYS32-70A1**

(2) No longer available

DR - Drilled THD - Threaded

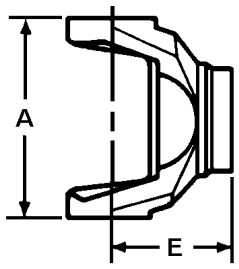

Type 1

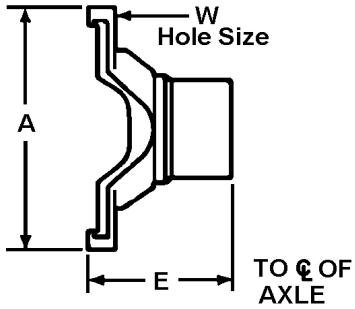

Type 2

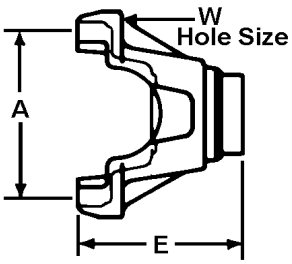

Type 3

SSHD FAMILY (FORWARD-REAR YOKES FOR 3200-M-585 CARRIER)

SPLINE SIZE	SERIES	TYPE	A	E	W	PRODUCTION PART NUMBER	REPLACED BY SERVICE PART NUMBER
INPUT YOKES 2-1/4"-10	16N	1	5-5/16"	5-5/8"		A1-3280-X-3274	**16N-4-6891X**
	17N	1	6-3/32"	6-1/16"		A3-3280-E-1643	**17N-4-4411X**
	18N	1	7-35/64"	5-27/32"		A1-3280-R-5452	**18N-4-2551X**
	82N	2	8-1/8"	4-3/4"	15/32" DR	A2-3280-U-1815	**82NYS36-30A**
	82N	2	8-1/8"	4-3/4"	1/2"-20 THD	A1-3280-M-3029	**82NYS36-26A1**
OUTPUT YOKES 2-1/4"-10	16N	1	5-5/16"	5-1/8"		A-3280-B-2186	**16N-4-5281X**
	17N	1	6-3/32"	6-1/2"		A1-3280-J-4248	**17N-4-4481X**
	1700	1	6-3/32"	5-1/4"		A-3280-F-1982	**17N-4-4361X**
	1810	1	7-17/32"	5-17/32"		A-3280-Z-5668 (2)	**18NYS31A**
	72N	2	5-27/32"	4-5/16"	1/2"-20 THD	A-3280-K-4145 (2)	**72NYS31-49A**
	72N	2	5-27/32"	3-7/8"	15/32" DR	A-3897-R-512	**72NYS31-4A**
	72N	2	5-27/32"	4-5/16"	15/32" DR	A-3280-T-2958 (2)	**72NYS31-8A**

(2) No longer available

DR - Drilled THD - Threaded

YOKE ASSEMBLIES

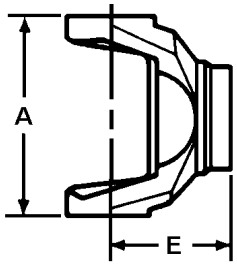

Type 1

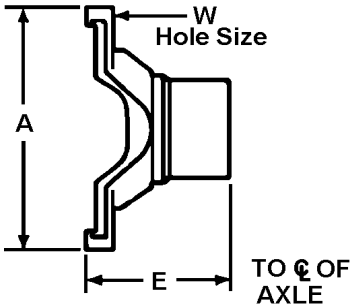

Type 2

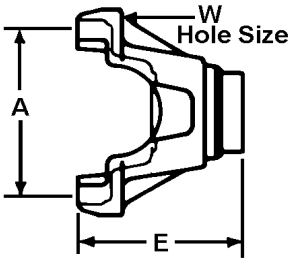

Type 3

SSHD FAMILY (REAR-REAR INPUT YOKES FOR 3200-H-606 & 3200-C-1433 CARRIERS)

SPLINE SIZE	SERIES	TYPE	A	E	W	PRODUCTION PART NUMBER	REPLACED BY SERVICE PART NUMBER
1-31/32"-10	155N	3	4-31/32"	4-11/16"		A1-3280-F-2450	**155NYS32-7A**
	16N	1	5-5/16"	5-1/8"		A-3280-B-2186	**16N-4-5281X**
	17N	1	6-3/32"	4-13/16"		A-3897-K-427	**17N-4-4181X**
	17N	1	6-3/32"	5-1/4"		A-3280-F-1982	**17N-4-4361X**
	72N	2	5-27/32"	3-7/8"	1/2"-20 THD	A-3280-H-2400 (2)	**72NYS31-3A (2)**
	72N	2	5-27/32"	3-7/8"	15/32" DR	A-3897-R-512	**72NYS31-4A**
	82N	2	8-1/8"	3-7/8"	15/32" DR	A-3897-L-532	**82NYS31-5A (2)**
	82N	2	8-1/8"	3-7/8"	1/2"-20 THD	A-3280-Q-2279	**82NYS31-6A**
	85WB	2	6-1/2"	4-1/8"	15/32" DR	A-3280-W-7251	**85WBYS31-4A**
2"-39	16N	1	5-5/16"	5-1/8"		A3-3280-U-6755	**16N-4-6951X**
	16N	1	5-5/16"	5-15/16"		A1-3260-R-18	**16N-4-6961X**
	17N	1	6-3/32"	4-13/16"		A1-3280-H-6768	**17N-4-6941X**
	17N	1	6-3/32"	5-1/4"		A3-3280-T-6754	**17N-4-6951X**
	17N	1	6-3/32"	6-1/2"		A2-3280-X-6758	**17N-4-6871X**
	176N	1	7"	5-3/16"		A1-3260-M-247	**176NYS32-4A1 (2)**
	18N	1	7-9/16"	5-17/32"		A3-3280-T-7118	**18N-4-3571X**
	72N	2	5-27/32"	3-7/8"	15/32" DR	A2-3280-F-6766	**72NYS32-219A**
	72N	2	5-27/32"	4-5/16"	1/2"-20 THD	A1-3280-W-6757	**72NYS32-221A (2)**
	72N	2	5-27/32"	4-5/16"	15/32" DR	A2-3280-V-6756	**72NYS32-222A1**
	82N	2	8-1/8"	3-7/8"	1/2"-20 THD	A1-3280-Z-6760 (2)	**82NYS32-70A (2)**

(2) No longer available

DR - Drilled THD - Threaded

KIT 204

ITEM	PART NO.	QTY.	DESCRIPTION	REMARKS
1	A-1199-S-1917	1	Wiper-outer-use with grease seals only	QHD. Outer oil seal kit.
2	A-1205-R-616	1	Grease seal-outer	
3	2208-Z-416	2	Gasket	

KIT 237

ITEM	PART NO.	QTY.	DESCRIPTION	REMARKS
1	A-1205-E-1227	1	Seal assy.-oil input shaft	SQHP. Fwd. input yoke deflector,
2	1199-Z-3146	1	Wiper-oil seal	wear sleeve & oil seal assy.

KIT 239

ITEM	PART NO.	QTY.	DESCRIPTION	REMARKS
1	A-1205-B-1328	1	Oil seal assy.-yoke flange	SL/SQ100. Input yoke wear sleeve
2	1199-A-3329	1	Sleeve-yoke wear	and oil seal assy. kit.

KIT 315

ITEM	PART NO.	QTY.	DESCRIPTION	REMARKS
1	2233-U-151	4	Pinion-diff.	LHD. Main differential nest kit
2	2234-X-310	2	Side gear-diff.	less spider.
3	1229-R-1032	4	Washer-pinion thrust	
4	1229-T-1034	2	Washer-side gear thrust	

KIT 316

ITEM	PART NO.	QTY.	DESCRIPTION	REMARKS
1	2233-U-151	4	Pinion-diff.	QHD. Main differential nest kit
2	2234-X-700	2	Side gear-diff.	less spider.
3	1229-R-1032	4	Washer-pinion thrust	
4	1229-T-1034	2	Washer-side gear thrust	

KIT 317

ITEM	PART NO.	QTY.	DESCRIPTION	REMARKS
1	2233-U-151	4	Pinion-diff.	SL/SQHD. Main differential nest kit
2	2234-X-310	2	Side gear-diff.	with spider.
3	3278-S-305	1	Spider-diff.	
4	1229-R-1032	4	Washer-pinion thrust	
5	1229-T-1034	2	Washer-side gear thrust	

KIT 318

ITEM	PART NO.	QTY.	DESCRIPTION	REMARKS
1	2233-U-151	4	Pinion-diff.	SL/SQHD. Main differential nest kit
2	2234-X-700	2	Side gear-diff.	with spider.
3	3278-S-305	1	Spider-diff.	
4	1229-R-1032	4	Washer-pinion thrust	
5	1229-T-1034	2	Washer-side gear thrust	

SERVICE KITS

KIT 322

ITEM	PART NO.	QTY.	DESCRIPTION	REMARKS
1	2208-E-447	1	Gasket	SL/SQHD. Main differential nest kit with spider.
2	2233-A-105	4	Pinion-diff.	
3	2234-M-325	1	Side gear-forward	
4	2234-B-340	1	Side gear-rear	
5	3278-M-91	1	Spider-diff.	
6	1229-Q-2877	4	Washer-pinion thrust	
7	1229-G-1619	1	Washer-rear side gear thrust	
8	1229-J-1622	1	Washer-forward side gear thrust	
9	1244-Y-701	1	Spacer-bearing	

KIT 325

ITEM	PART NO.	QTY.	DESCRIPTION	REMARKS
1	1229-R-1032	4	Thrust washer-diff. pinion	SL/SQHD & P-174. Main differential nest kit less spider.
2	1229-T-1034	2	Thrust washer-diff. side gear	
3	2233-U-151	4	Pinon-diff.	
4	2234-C-783	2	Side gear-diff.	

KIT 326

ITEM	PART NO.	QTY.	DESCRIPTION	REMARKS
1	1229-R-1032	4	Thrust washer-diff. pinion	SL/SQHD & P-174. Main differential nest kit with spider.
2	1229-T-1034	2	Thrust washer-diff. side gear	
3	2233-U-151	4	Pinon-diff.	
4	2234-C-783	2	Side gear-diff.	
5	3278-S-305	1	Spider-diff.	

KIT 327

ITEM	PART NO.	QTY.	DESCRIPTION	REMARKS
1	1229-E-993	2	Thrust washer-side gear	SSHD series. Main differential nest kit with spider.
2	2234-K-271	2	Side gear-diff. (2-1/4"-23 spline)	
3	1229-D-992	4	Thrust washer-pinion gear	
4	2233-U-99	4	Gear-pinion	
5	3278-A-79	1	Spider-diff.	

KIT 332

ITEM	PART NO.	QTY.	DESCRIPTION	REMARKS
1	3278-V-1088	1	Spider-diff.	SSHD series. Inter-axle differential kit with spider.
2	2233-W-153	4	Pinion-diff.	
3	1229-T-1606	4	Washer-diff. pinion	
4	2234-M-793	1	Side gear-rear	
5	1229-V-2570	1	Retainer-diff. spider	
6	1229-L-4354	1	Retainer-input shaft (snap ring)	

KIT 333

ITEM	PART NO.	QTY.	DESCRIPTION	REMARKS
1	3278-Y-129	1	Spider-diff.	SSHD series. Inter-axle differential kit with spider.
2	2233-W-153	4	Pinion-diff.	
3	1229-T-1606	4	Washer-diff. pinion	
4	2234-F-604	1	Side gear-rear	
5	3892-F-1826	1	Drive gear	
6	1229-N-1600	1	Washer-side gear thrust	

KIT 337

ITEM	PART NO.	QTY.	DESCRIPTION	REMARKS
1	3278-Z-104	1	Spider-diff.	Inter-axle differential kit with spider. D & F series, std. diff., 1.77"-19 spline
2	2233-A-105	4	Pinion-diff.	
3	1229-Y-883	2	Washer-side gear thrust	
4	2234-Q-797	2	Gear-diff. side	
5	1229-Q-2877	4	Washer-pinion thrust	

KIT 346

ITEM	PART NO.	QTY.	DESCRIPTION	REMARKS
1	2233-W-153	4	Pinion-diff.	SSHD series. Inter-axle differential kit less spider.
2	1229-T-1606	4	Washer-diff. pinion	
3	2234-M-793	1	Side gear-rear	
4	1229-V-2570	1	Retainer-diff. spider	
5	1229-L-4354	1	Retainer-input shaft (snap ring)	

KIT 347

ITEM	PART NO.	QTY.	DESCRIPTION	REMARKS
1	1229-E-993	2	Thrust washer-side gear	SSHD series. Main differential nest kit less spider.
2	2234-K-271	2	Side gear-diff. (2-1/4"-23 spline)	
3	1229-D-992	4	Thrust washer-pinion gear	
4	2233-U-99	4	Gear-pinion	

KIT 348

ITEM	PART NO.	QTY.	DESCRIPTION	REMARKS
1	2234-F-344	2	Side gear-diff. (2-3/8"-24 spline)	R/S-170 & SSHD series. 9-16 tooth combination. Main differential nest kit less spider.
2	1229-E-993	2	Thrust washer	
3	2233-U-99	4	Pinon-diff.	
4	1229-D-992	4	Thrust washer-diff. pinion	

KIT 349

ITEM	PART NO.	QTY.	DESCRIPTION	REMARKS
1	A-3892-D-1824	1	Idler gear assembly	SL/SQHD. Inter-axle differential gear repair kit.
2	3892-S-4517	1	Helical gear-driven	
3	3892-P-2044	1	Drive gear-inter-axle diff.	
4	1227-N-898	1	Nut-drive pinion	

KIT 363

ITEM	PART NO.	QTY.	DESCRIPTION	REMARKS
1	2234-E-629	2	Side gear-diff.	R/S-170. Traction equalizer. Main differential nest kit with spider.
2	1229-V-2024	2	Thrust washer	
3	2233-U-99	4	Pinon-diff.	
4	1229-D-992	4	Thrust washer-diff. pinion	
5	3278-A-79	1	Spider-diff.	

KIT 381

ITEM	PART NO.	QTY.	DESCRIPTION	REMARKS
1	2234-T-358	2	Side gear-diff. (2-3/8"-24)	R/S-170. 9-14 tooth combination. Main differential nest kit with spider.
2	1229-E-993	2	Thrust washer	
3	2233-C-159	4	Pinon-diff.	
4	1229-D-992	4	Thrust washer-diff. pinion	
5	3278-A-79	1	Spider-diff.	

SERVICE KITS

KIT 382

ITEM	PART NO.	QTY.	DESCRIPTION	REMARKS
1	2234-T-358	2	Side gear-diff. (2-3/8"-24 spline)	R/S-170. 9-16 tooth combination.
2	1229-E-993	2	Thrust washer	Main differential nest kit less spider.
3	2233-C-159	4	Pinon-diff.	
4	1229-D-992	4	Thrust washer-diff. pinion	

KIT 383

ITEM	PART NO.	QTY.	DESCRIPTION	REMARKS
1	2234-F-344	2	Side gear-diff. (2-3/8"-24 spline)	R/S-170 & SSHD series.
2	1229-E-993	2	Thrust washer	9-16 tooth combination.
3	2233-U-99	4	Pinon-diff.	Main differential nest kit with spider.
4	1229-D-992	4	Thrust washer-diff. pinion	
5	3278-A-79	1	Spider-diff.	

KIT 389

ITEM	PART NO.	QTY.	DESCRIPTION	REMARKS
1	1229-E-1513	8	Washer-gear to case	SSHD series. Drive gear bolt kit.
2	S-2726-1	8	Bolt-gear to case	
3	NL-27-1	8	Locknut-gear to case	

KIT 392

ITEM	PART NO.	QTY.	DESCRIPTION	REMARKS
1	3278-C-107	1	Spider-diff.	Inter-axle differential kit with spider.
2	2233-J-140	4	Pinion-diff.	C series, std. diff., 1.62"-16 spline
3	1229-N-1314	2	Washer-side gear thrust	
4	2234-Y-233	2	Gear-diff. side	
5	1229-M-1313	4	Washer-pinion thrust	

KIT 394

ITEM	PART NO.	QTY.	DESCRIPTION	REMARKS
1	3278-Z-104	1	Spider-diff.	Inter-axle differential kit with spider.
2	2233-J-452	4	Pinion-diff.	D & F series, Hi-Traction diff.,
3	1229-Y-883	2	Washer-side gear thrust	1.77"-19 spline
4	2234-M-507	2	Gear-diff. side	
5	1229-Q-2877	4	Washer-pinion thrust	

KIT 396

ITEM	PART NO.	QTY.	DESCRIPTION	REMARKS
1	1229-R-1032	4	Thrust washer-diff. pinion	L-172, H-172, H-173, L-173.
2	1229-T-1034	2	Thrust washer-dif. side gear	Main differential nest kit with spider.
3	2233-U-151	4	Pinon-diff.	
4	2234-F-734	2	Side gear-diff.	
5	3278-H-86	1	Spider-diff.	

KIT 397

ITEM	PART NO.	QTY.	DESCRIPTION	REMARKS
1	1229-R-1032	4	Thrust washer-diff. pinion	L-172, H-172, H-173, L-173.
2	1229-T-1034	2	Thrust washer-dif. side gear	Main differential nest kit less spider.
3	2233-U-151	4	Pinon-diff.	
4	2234-F-734	2	Side gear-diff.	

KIT 462

ITEM	PART NO.	QTY.	DESCRIPTION		REMARKS
1	2208-Y-441	6	Gasket		QHD. Gasket and shim kit.
2	2208-X-440	4	Gasket		
3	2208-Z-416	4	Gasket		
4	2208-C-445	1	Gasket		
5	2208-D-446	1	Gasket		
6	2208-D-420	1	Gasket		
7	2203-E-421	1	Gasket		
8	2203-L-7448	1	Shim	.003	
9	2203-K-7447	3	Shim	.005	
10	2203-J-7446	4	Shim	.010	
11	2203-R-3008	4	Shim	.003	
12	2203-S-3009	1	Shim	.010	
13	2203-T-8366	1	Shim		

KIT 463

ITEM	PART NO.	QTY.	DESCRIPTION		REMARKS
1	2208-Y-441	4	Gasket		QHR. Gasket and shim kit.
2	2208-Z-416	4	Gasket		
3	2208-D-420	1	Gasket		
4	2203-E-421	1	Gasket		
5	2203-L-7448	1	Shim	.003	
6	2203-K-7447	3	Shim	.005	
7	2203-J-7446	4	Shim	.010	
8	2203-T-8366	1	Shim		

KIT 472

ITEM	PART NO.	QTY.	DESCRIPTION		REMARKS
1	2208-D-420	1	Gasket		LHD. Gasket and shim kit.
2	2208-F-422	4	Gasket		
3	2208-E-447	1	Gasket		
4	2208-J-608	1	Gasket		
5	2208-D-446	1	Gasket		
6	2208-M-429	1	Gasket		
7	2203-L-7448	1	Shim	.003	
8	2203-K-7447	3	Shim	.005	
9	2203-J-7446	4	Shim	.010	
10	2203-T-8366	1	Shim		

KIT 473

ITEM	PART NO.	QTY.	DESCRIPTION		REMARKS
1	2208-D-420	1	Gasket		LHR. Gasket and shim kit.
2	2208-F-422	4	Gasket		
3	2208-E-421	1	Gasket		
4	2203-L-7448	1	Shim	.003	
5	2203-K-7447	3	Shim	.005	
6	2203-J-7446	4	Shim	.010	
7	2203-T-8366	1	Shim		

SERVICE KITS

KIT 486

ITEM	PART NO.	QTY.	DESCRIPTION		REMARKS
1	2208-X-440	4	Gasket		SHD. Gasket and shim kit.
2	2208-Y-415	1	Gasket		
3	2208-F-500	1	Gasket		
4	2208-G-501	1	Gasket		
5	2208-M-429	1	Gasket		
6	2203-F-2788	4	Shim	.003	
7	2203-G-2789	2	Shim	.005	
8	2203-H-2790	4	Shim	.010	
9	2203-G-4089	3	Shim	.003	
10	2203-H-4090	4	Shim	.005	
11	5-X-591	1	Felt		

KIT 487

ITEM	PART NO.	QTY.	DESCRIPTION		REMARKS
1	2208-X-440	4	Gasket		SHR. Gasket and shim kit.
2	2208-Y-415	1	Gasket		
3	2208-H-424	1	Gasket		
4	2203-L-1260	1	Shim	.003	
5	2203-A-469	1	Shim	.005	
6	2203-B-470	3	Shim	.010	

KIT 489

ITEM	PART NO.	QTY.	DESCRIPTION		REMARKS
1	2208-D-1096	1	Gasket		R/S-170. Gasket and shim kit.
2	2208-X-440	4	Gasket		
3	2208-Y-441	3	Gasket		
4	2203-L-1260	1	Shim-	.003	
5	2203-A-469	1	pinion cage	.005	
6	2203-B-470	3		.010	
7	2208-H-424	1	Gasket		

KIT 519

ITEM	PART NO.	QTY.	DESCRIPTION		REMARKS
1	2203-F-1566	2	Shim/spacer	.172	C series. Bearing shim spacer kit.
2	2203-G-1567	2	Shim/spacer	.173	
3	2203-H-1568	2	Shim/spacer	.174	
4	2203-J-1570	2	Shim/spacer	.175	
5	2203-K-1571	2	Shim/spacer	.176	
6	2203-L-1572	2	Shim/spacer	.177	
7	2203-M-1573	2	Shim/spacer	.183	
8	2203-N-1574	2	Shim/spacer	.189	
9	2203-P-1576	2	Shim/spacer	.195	
10	2203-Q-1577	2	Shim/spacer	.201	

KIT 521

ITEM	PART NO.	QTY.	DESCRIPTION	REMARKS
1	2203-L-1078	2	Spacer .248	R/S-170 & SSHD series.
2	2203-M-1079	2	Spacer .249	Bearing shim spacer kit.
3	2203-N-1080	2	Spacer .250	
4	2203-P-1082	2	Spacer .251	
5	2203-Q-1083	2	Spacer .252	
6	2203-R-1084	2	Spacer .253	
7	2203-S-1085	2	Spacer .259	
8	2203-T-1086	2	Spacer .265	
9	2203-U-1087	2	Spacer .271	
10	2203-V-1088	2	Spacer .277	
11	2203-W-1089	2	Spacer .283	

KIT 530

ITEM	PART NO.	QTY.	DESCRIPTION	REMARKS
1	1229-A-2237	1	Snap ring .155	SL/SQHD & SL/SQ-100 series.
2	1229-B-2238	1	Snap ring .158	Bearing thru-shaft snap ring kit.
3	1229-C-2239	1	Snap ring .161	
4	1229-D-2240	1	Snap ring .164	
5	1229-E-2241	1	Snap ring .167	
6	1229-F-2242	1	Snap ring .170	
7	1229-G-2243	1	Snap ring .173	
8	1229-H-2244	1	Snap ring .176	
9	1229-J-2246	1	Snap ring .179	
10	1229-K-2247	1	Snap ring .182	

KIT 545

ITEM	PART NO.	QTY.	DESCRIPTION	REMARKS
1	2203-S-7819	1	Shim/spacer .299	SL/SQ-100 series.
2	2203-T-7820	1	Shim/spacer .300	Drive pinion bearing shim spacers
3	2203-U-7821	1	Shim/spacer .301	
4	2203-V-7822	1	Shim/spacer .302	
5	2203-W-7823	1	Shim/spacer .303	
6	2203-X-7824	1	Shim/spacer .304	
7	2203-Y-7825	1	Shim/spacer .310	
8	2203-Z-7826	1	Shim/spacer .316	
9	2203-A-7827	1	Shim/spacer .322	
10	2203-B-7828	1	Shim/spacer .328	

KIT 546

ITEM	PART NO.	QTY.	DESCRIPTION	REMARKS
1	2203-C-7829	1	Shim/spacer .224	SL/SQ-100 series.
2	2203-D-7830	1	Shim/spacer .225	Bearing cone spacer kit.
3	2203-E-7831	1	Shim/spacer .226	
4	2203-F-7832	1	Shim/spacer .227	
5	2203-G-7833	1	Shim/spacer .228	
6	2203-H-7834	1	Shim/spacer .229	
7	2203-J-7836	1	Shim/spacer .235	
8	2203-K-7837	1	Shim/spacer .241	
9	2203-L-7838	1	Shim/spacer .247	
10	2203-M-7839	1	Shim/spacer .253	
11	2203-N-7840	1	Shim/spacer .259	

SERVICE KITS

KIT 562

ITEM	PART NO.	QTY.	DESCRIPTION	REMARKS
1	S-2623-1	8	Capscrew	SL/SQ-100. Hardware kit for
2	1229-C-1017	16	Washer-flat	A1-3235-B-1172.
3	NL-26-1	8	Locknut-fin.	

KIT 570

ITEM	PART NO.	QTY.	DESCRIPTION	REMARKS
1	15-X-1523	12	Bolt-gear to differential case	L-172, H-172, H-173, L-173, P-174,
2	1229-U-1503	12	Washer-gear to differential case	SL/SQ100 & SL/SQHD series.
3	NL-110-1	12	Nut-gear to differential case	Bolt on gear hardware.

KIT 576

ITEM	PART NO.	QTY.	DESCRIPTION	REMARKS
1	1229-P-2590	1	Snap ring .155	SSHD series. Forward/Rear.
2	1229-Q-2591	1	Snap ring .158	Bearing thru-shaft snap rings.
3	1229-R-2592	1	Snap ring .161	
4	1229-S-2593	1	Snap ring .164	
5	1229-T-2594	1	Snap ring .167	
6	1229-U-2595	1	Snap ring .170	
7	1229-V-2596	1	Snap ring .173	
8	1229-W-2597	1	Snap ring .176	
9	1229-X-2598	1	Snap ring .179	
10	1229-Y-2599	1	Snap ring .182	

KIT 577

ITEM	PART NO.	QTY.	DESCRIPTION	REMARKS
1	2203-L-1260	1	Shim .003	SSHD series. Shim kit.
2	2203-A-469	1	Shim .005	Rear/Rear.
3	2203-B-470	1	Shim .010	

KIT 578

ITEM	PART NO.	QTY.	DESCRIPTION	REMARKS
1	2203-Q-6803	3	Shim .003	SSHD series. Shim kit.
2	2203-R-6804	2	Shim .005	Forward/Rear.
3	2203-S-6805	1	Shim .010	

KIT 591

ITEM	PART NO.	QTY.	DESCRIPTION	REMARKS
1	2203-Y-2521	1	Spacer .750	SL/SQHD series. Bearing spacers.
2	2203-Z-2522	1	Spacer .760	
3	2203-A-2523	1	Spacer .770	
4	2203-B-2524	1	Spacer .780	
5	2203-C-2525	1	Spacer .740	
6	2203-D-2526	1	Spacer .247	
7	2203-E-2527	1	Spacer .248	
8	2203-F-2528	1	Spacer .249	
9	2203-G-2529	1	Spacer .250	
10	2203-H-2530	1	Spacer .251	
11	2203-J-2532	1	Spacer .252	
12	2203-K-2533	1	Spacer .253	
13	2203-L-2534	1	Spacer .254	
14	2203-M-2535	1	Spacer .255	

KIT 592

ITEM	PART NO.	QTY.	DESCRIPTION	REMARKS
1	2203-Y-1091	2	Bearing shim .238	SL/SQHD series.
2	2203-Z-1092	2	Bearing shim .239	Forward pinion bearing shims.
3	2203-A-1093	2	Bearing shim .240	
4	2203-B-1094	2	Bearing shim .241	
5	2203-C-1095	2	Bearing shim .242	
6	2203-D-1096	2	Bearing shim .243	
7	2203-E-1097	2	Bearing shim .249	
8	2203-F-1098	2	Bearing shim .255	
9	2203-G-1099	2	Bearing shim .261	
10	2203-H-1100	2	Bearing shim .267	
11	2203-J-1102	2	Bearing shim .273	

KIT 599

ITEM	PART NO.	QTY.	DESCRIPTION	REMARKS
1	2203-S-6857	1	Shim/spacer .125	F/D Series. Shim/spacer kit.
2	2203-T-6858	1	Shim/spacer .126	
3	2203-U-6859	1	Shim/spacer .127	
4	2203-V-6860	1	Shim/spacer .128	
5	2203-W-6861	1	Shim/spacer .129	
6	2203-X-6862	1	Shim/spacer .130	
7	2203-Y-6863	1	Shim/spacer .136	
8	2203-Z-6864	1	Shim/spacer .142	
9	2203-A-6865	1	Shim/spacer .148	
10	2203-B-6866	1	Shim/spacer .154	
11	2203-C-6867	1	Shim/spacer .158	

KIT 939

ITEM	PART NO.	QTY.	DESCRIPTION	REMARKS
1	2203-A-6319	3	Shim .003	SL/SQ-100. Gasket & shim kit.
2	2203-B-6320	4	Shim .005	
3	2203-C-6321	1	Shim .010	
4	2203-S-6519	1	Shim .005	
5	2208-X-440	4	Gasket-axle shaft	
6	3208-Y-25	1	Gasket-pinion bearing cage	

KIT 946

ITEM	PART NO.	QTY.	DESCRIPTION	REMARKS
1	15-X-776	12	Bolt-gear to case	C series. Drive gear bolt kit.
3	1229-E-1513	12	Washer-gear to case	
4	NL-17-1	12	Nut-gear to case	

KIT 947

ITEM	PART NO.	QTY.	DESCRIPTION	REMARKS
1	15-X-1728	12	Bolt-gear to case	C, D & F series. Drive gear bolt kit.
3	1229-C-1511	12	Washer-gear to case	
4	NL-18-1	12	Nut-gear to case	

KIT 948

ITEM	PART NO.	QTY.	DESCRIPTION	REMARKS
1	15-X-1474	12	Bolt-gear to case	SSHD series. Drive gear bolt kit.
3	1229-U-1503	12	Washer-gear to case	
4	NL-110-1	12	Nut-gear to case	

SERVICE KITS

KIT 984

ITEM	PART NO.	QTY.	DESCRIPTION	REMARKS
1	3280-V-5040	1	Filter	SQ-100P. Oil filter & shield kit.
2	3280-V-6964	1	Shield-oil filter	

KIT 1379

ITEM	PART NO.	QTY.	DESCRIPTION	REMARKS
1	A-1205-W-1349	1	Oil seal & wiper assy.-inner	LHD. Oil seal, bearing & gasket kit.
2	47686	1	Cone-inner wheel bearing	
3	47620	1	Cup-inner wheel bearing	
4	39590	1	Cone-outer wheel bearing	
5	39520	1	Cup-outer wheel bearing	
6	2208-H-476	1	Gasket	

KIT 1399

ITEM	PART NO.	QTY	DESCRIPTION	REMARKS
1	2203-V-8030	1	Shim-pinion brg. .378	QAR shim kit.
2	2203-W-8031	1	Shim-pinion brg. .379	
3	2203-X-8032	1	Shim-pinion brg. .380	
4	2203-Y-8033	1	Shim-pinion brg. .381	
5	2203-Z-8034	1	Shim-pinion brg. .382	
6	2203-A-8035	1	Shim-pinion brg. .383	
7	2203-B-8036	1	Shim-pinion brg. .389	
8	2203-C-8037	1	Shim-pinion brg. .395	
9	2203-D-8038	1	Shim-pinion brg. .401	
10	2203-E-8039	1	Shim-pinion brg. .407	
11	2203-F-8040	1	Shim-pinion brg. .413	

KIT 1500

ITEM	PART NO.	QTY.	DESCRIPTION	REMARKS
1	2203-A-6319	3	Shim .003	SL/SQ-100 series.
2	2203-B-6320	4	Shim .005	Pinion & input brg. cage shim kit.
3	2203-C-6321	1	Shim .010	
4	2203-R-6518	1	Shim .003	
5	2203-S-6519	1	Shim .005	
6	2203-T-6520	1	Shim .010	

KIT 1514

ITEM	PART NO.	QTY.	DESCRIPTION	REMARKS
1	2208-X-440	4	Gasket	SSHD. Forward/Rear.
2	2208-Y-415	1	Gasket	Gasket and shim kit.
3	2208-F-500	1	Gasket	
4	2208-G-501	1	Gasket	
5	2208-M-429	1	Gasket	
6	2203-F-2788	4	Shim .003	
7	2203-G-2789	2	Shim .005	
8	2203-H-2790	4	Shim .010	
9	2203-Q-6803	3	Shim .003	
10	2203-R-6804	4	Shim .005	
11	2203-S-6805	4	Shim .010	
12	5-X-591	1	Felt	

KIT 1555

ITEM	PART NO.	QTY.	DESCRIPTION	REMARKS
1	2203-K-1571	2	Shim/spacer .176	F/D series. Shim/spacer kit.
2	2203-G-6923	2	Shim/spacer .153	
3	2203-H-6924	2	Shim/spacer .154	
4	2203-J-6926	2	Shim/spacer .155	
5	2203-K-6927	2	Shim/spacer .156	
6	2203-L-6928	2	Shim/spacer .157	
7	2203-M-6929	2	Shim/spacer .158	
8	2203-N-6930	2	Shim/spacer .164	
9	2203-P-6932	2	Shim/spacer .170	
10	2203-R-6934	2	Shim/spacer .182	

KIT 1556

ITEM	PART NO.	QTY.	DESCRIPTION	REMARKS
1	2203-U-7535	2	Shim/spacer .234	H-172, L-172, H-173, L-173 & P-174.
2	2203-V-7536	2	Shim/spacer .235	Pinion bearing shim spacers.
3	2203-W-7537	2	Shim/spacer .236	
4	2203-X-7538	2	Shim/spacer .237	
5	2203-Y-7539	2	Shim/spacer .238	
6	2203-Z-7540	2	Shim/spacer .239	
7	2203-A-7541	2	Shim/spacer .240	
8	2203-F-7546	2	Shim/spacer .247	
9	2203-G-7547	2	Shim/spacer .254	
10	2203-H-7548	2	Shim/spacer .261	
11	2203-J-7550	2	Shim/spacer .268	
12	2203-K-7551	2	Shim/spacer .275	
13	2203-L-7552	2	Shim/spacer .282	
14	2203-M-7553	2	Shim/spacer .289	
15	2203-N-7554	2	Shim/spacer .296	
16	2203-Y-7851	2	Shim/spacer .242	
17	2203-Z-7852	2	Shim/spacer .244	
18	2203-A-7853	2	Shim/spacer .246	

KIT 1568

ITEM	PART NO.	QTY.	DESCRIPTION	REMARKS
1	2203-C-8115	1	Shim-pinion brg. cage .003	QAR. Bearing cage shim kit.
2	2203-D-8116	3	Shim-pinion brg. cage .005	
3	2203-E-8117	4	Shim-pinion brg. cage .010	
4	2203-B-9804	1	Shim-pinion brg. cage .020	

KIT 1569

ITEM	PART NO.	QTY.	DESCRIPTION	REMARKS
1	2203-C-8115	1	Shim-pinion brg. cage .003	SL/SQ100. Shim & gasket kit.
2	2203-D-8116	3	Shim-pinion brg. cage .005	
3	2203-E-8117	4	Shim-pinion brg. cage .010	
4	3208-Y-25	1	Gasket-pinion bearing cage	
5	2208-X-440	4	Gasket-axle shaft	

SERVICE KITS

KIT 1570

ITEM	PART NO.	QTY	DESCRIPTION	REMARKS
1	A-1205-U-1685	1	Oil seal assembly	QAR rigidized pinion repair kit. (Same as KIT 1390 except less gear set.)
2	65500	1	Cup-pinion inner bearing	
3	72487	1	Cup-pinion outer bearing	
4	65237	1	Cone-pinion inner bearing	
5	72225C	1	Cone-pinion outer bearing	
6	1244-F-1592	1	Sleeve-pinion bearing	
7	2208-X-440	4	Gasket-axle shaft	
8	2203-V-8030	1	Shim-pinion brg. .378	
9	2203-W-8031	1	Shim-pinion brg. .379	
10	2203-X-8032	1	Shim-pinion brg. .380	
11	2203-Y-8033	1	Shim-pinion brg. .381	
12	2203-Z-8034	1	Shim-pinion brg. .382	
13	2203-A-8035	1	Shim-pinion brg. .383	
14	2203-B-8036	1	Shim-pinion brg. .389	
15	2203-C-8037	1	Shim-pinion brg. .395	
16	2203-D-8038	1	Shim-pinion brg. .401	
17	2203-E-8039	1	Shim-pinion brg. .407	
18	2203-F-8040	1	Shim-pinion brg. .413	
19	15-X-1523	12	Bolt-gear to diff. case	
20	1229-U-1503	12	Washer-gear to diff. case	
21	NL-110-1	12	Nut-gear to diff. case	

KIT 1588

ITEM	PART NO.	QTY.	DESCRIPTION	REMARKS
1	A1-2297-B-4240	1	Pump shaft assembly	SL/SQ-100 series. Pump shaft assy. kit.
2	1244-V-1712	1	Spacer-shift fork	

KIT 1589

ITEM	PART NO.	QTY.	DESCRIPTION	REMARKS
1	A-3226-L-896	1	Cage assy.	R/S-170 series.
2	2203-L-1078	2	Spacer .248	
3	2203-M-1079	2	Spacer .249	
4	2203-N-1080	2	Spacer .250	
5	2203-P-1082	2	Spacer .251	
6	2203-Q-1083	2	Spacer .252	
7	2203-R-1084	2	Spacer .253	
8	2203-S-1085	2	Spacer .259	
9	2203-T-1086	2	Spacer .265	
10	2203-U-1087	2	Spacer .271	
11	2203-V-1088	2	Spacer .277	
12	2203-W-1089	2	Spacer .283	
13	DEFR50-2	1	Deflector	
14	A-1205-Q-1915	1	Seal	
15	2208-D-1096	1	Gasket	
16	2208-X-440	4	Gasket	
17	2208-Y-441	3	Gasket	
18	2203-L-1260	1	Shim- .003	
19	2203-A-469	1	pinion cage .005	
20	2203-B-470	3	.010	
21	2208-H-424	1	Gasket	

KIT 1590

ITEM	PART NO.	QTY.	DESCRIPTION	REMARKS
1	S-2524-2	8	Bolt/capscrew	SL/SQ-100 series. Bolt kit for inter-axle diff.
2	NL-25-1	8	Locknut	
3	1229-K-1669	16	Washer	

KIT 1609

ITEM	PART NO.	QTY.	DESCRIPTION	REMARKS
1	R945008	1	Oil seal	SL/SQ-100. Oil seal retrofit kit plus input shaft.
2	A-3226-M-585	1	Brg. cage & cup-input shaft	

KIT 1610

ITEM	PART NO.	QTY.	DESCRIPTION	REMARKS
1	A-1205-G-2425	1	Triple lip oil seal	SL/SQ-100. Triple lip oil seal retrofit kit plus thru-shaft.
2	A3226-X-596	1	Brg. cage & cup-thru shaft	

KIT 1612

ITEM	PART NO.	QTY.	DESCRIPTION	REMARKS
1	R945009	1	Oil seal assy.	SL/SQ-100. Oil seal retrofit kit plus bearing cage and cup.
2	A-3266-Z-806	1	Brg. cage and cup. (after 8/83 design)	

KIT 2117

ITEM	PART NO.	QTY.	DESCRIPTION	REMARKS
1	A-3892-D-1824	1	Idler gear assembly	SL/SQHD series. Inter-axle differential gear repair kit.
2	3892-C-4735	1	Helical gear-driven	
3	3892-P-2044	1	Drive gear-inter-axle diff.	
4	1227-N-898	1	Nut-drive pinion	

KIT 2119

ITEM	PART NO.	QTY.	DESCRIPTION	REMARKS
1	R945009	1	Oil seal-pinion ret.	SL/SQ-100 series. Bearing, oil seal & gasket kit.
2	65500	1	Cup-pinion brg. inner	
3	72487	1	outer	
4	JM-716610	2	Cup-diff. bearing	
5	JM-716649	2	Cone-diff. bearing	
6	65237	1	Cone-pinion brg. inner	
7	72225C	1	outer	
8	2208-X-440	4	Gasket-axle shaft flange	

KIT 2201

ITEM	PART NO.	QTY.	DESCRIPTION	REMARKS
1	2234-E-473	2	Side gear-diff. (2-3/8"-24)	R/S-170. 9-12 tooth combination. Main differential nest kit with spider (High traction)
2	1229-E-993	2	Thrust washer	
3	2233-Q-459	4	Pinon-diff.	
4	1229-D-992	4	Thrust washer-diff. pinion	
5	3278-A-79	1	Spider-diff.	

KIT 2229

ITEM	PART NO.	QTY.	DESCRIPTION	REMARKS
1	3278-Z-104	1	Spider-diff.	Inter-axle differential kit with spider. D & F series, std. diff., 1.75"-34 spline
2	2233-A-105	4	Pinion-diff.	
3	1229-Y-883	2	Washer-side gear thrust	
4	2234-N-872	2	Gear-diff. side	
5	1229-Q-2877	4	Washer-pinion thrust	

SERVICE KITS

KIT 2247

ITEM	PART NO.	QTY.	DESCRIPTION	REMARKS
1	3278-L-298	1	Spider-diff.	Inter-axle differential kit with spider. C series, std. diff., 1.66-32 spline
2	2233-J-140	4	Pinion-diff.	
3	1229-N-1314	2	Washer-side gear thrust	
4	2234-R-954	2	Gear-diff. side	
5	1229-M-1313	4	Washer-pinion thrust	

KIT 2260

ITEM	PART NO.	QTY.	DESCRIPTION	REMARKS
1	2233-U-151	4	Pinion-main diff.	For SL-100/P (fwd-rear & rear-rear carrier) main diff. nest with spider.
2	1229-R-1032	4	Thrust washer-main diff.	
3	2234-D-966	2	Side gear-main diff.	
4	1229-T-1034	2	Thrust washer-main diff.	
5	3278-S-305	1	Spider-main diff.	

KIT 2261

ITEM	PART NO.	QTY.	DESCRIPTION	REMARKS
1	2233-U-151	4	Pinion-main diff.	For SL-100/P (fwd-rear & rear-rear carrier) main diff. nest less spider.
2	1229-R-1032	4	Thrust washer-main diff.	
3	2234-D-966	2	Side gear-main diff.	
4	1229-T-1034	2	Thrust washer-main diff.	

KIT 2266

ITEM	PART NO.	QTY.	DESCRIPTION	REMARKS
1	A1-3261-V-308	1	Air shift assy.	SL/SQ-100 series. Air shift (single line) kit.
2	10-X-1334	4	Capscrew	

KIT 2268

ITEM	PART NO.	QTY.	DESCRIPTION	REMARKS
1	A-3296-T-150	1	Shift fork	QHP, LP/QP-100. Shift fork retrofit kit
2	2244-E-83	1	Shift shaft	
3	3280-U-8081	1	Gear cover	
4	2258-U-411	1	Spring	

KIT 2269

ITEM	PART NO.	QTY.	DESCRIPTION	REMARKS
1	A-3296-T-150	1	Shift fork	LD/QD-100 Shift fork retrofit kit
2	2244-E-83	1	Shift shaft	
3	3266-H-970	1	Gear cover	
4	2258-U-411	1	Spring	

KIT 2274

ITEM	PART NO.	QTY.	DESCRIPTION	REMARKS
1	2233-W-153	4	Pinion-diff.	SL/SQ-100 series.
2	1229-T-1606	4	Washer-diff. pinion	Inter-axle diff. nest, side gear & helical (integral) drive gear kit.
3	3278-H-372	1	Spider-diff.	
4	3892-F-4738	1	Gear-integral spur and bevel	
5	2234-E-1019	1	Gear-rear side	
6	1229-H-2764	1	Washer-forward gear	

KIT 2285

ITEM	PART NO.	QTY.	DESCRIPTION	REMARKS
1	A-3296-T-150	1	Shift fork	LD/QD-100 - Helical gear cover, cage, inter-axle diff., input shaft, seal, shim, and bearing kit.
2	2244-E-83	1	Shift shaft	
3	3266-H-970	1	Gear cover	
4	2258-U-411	1	Spring	
5	A-3266-M-585	1	Input brg. cage assy.	
6	R945008	1	Oil seal assy.	
7	2203-R-6518	3	Shim-input brg. cage .003	
8	2203-S-6519	3	Shim-input brg. cage .005	
9	2203-T-6520	3	Shim-input brg. cage .010	
10	3280-G-5519	1	Collar-shaft	
11	JM-511946	1	Cone-input shaft brg.	
12	JLM-710910	1	Cup-input shaft rear brg.	
13	JLM-710949C	1	Cone-input shaft rear brg.	
14	A-1205-E-1227	1	Oil seal assy.-input shaft (optional)	
15	A3-3235-F-1800	1	Differential case assy.	
16	3892-M-4927	1	Gear -spur	
17	1229-M-4069	1	Thrust washer	
18	2234-E-1019	1	Gear-side	
19	A1-3297-Z-1014	1	Input shaft assy.	

KIT 2294

ITEM	PART NO.	QTY.	DESCRIPTION	REMARKS
1	2234-F-1046	2	Side gear-diff.	SL/SQ-100 series. Main differential nest kit with spider.
2	2233-J-1024	4	Pinion-diff.	
3	3278-S-305	1	Spider-diff.	
4	1229-R-1032	4	Washer-diff. pinion thrust	
5	1229-T-1034	2	Washer-diff. side gear thrust	

KIT 2306

ITEM	PART NO.	QTY.	DESCRIPTION	REMARKS
1	15-X-1626	12	Body fit bolt	SQR. Bolt on gearing hardware kit.
2	1229-U-1503	12	Washer	
3	NL-110-1	12	Locknut	

KIT 2427

ITEM	PART NO.	QTY.	DESCRIPTION	REMARKS
1	3107-E-1071	1	Clutch collar	SSHD. Shift update kit.
2	A-3226-R-1162	1	Bearing cage	
3	R945007	1	Seal	

KIT 2467

ITEM	PART NO.	QTY.	DESCRIPTION	REMARKS
1	S-2826P-2	16	Capscrew	SL/SQ-100 series. Bolt kit.

KIT 2498

ITEM	PART NO.	QTY.	DESCRIPTION	REMARKS
1	3280-N-6748	1	Input shaft-diff.	SSHD. Input shaft repair kit.
2	1229-L-4354	1	Snap ring	
3	1227-D-940	1	Nut	

SERVICE KITS

KIT 4005

ITEM	PART NO.	QTY.	DESCRIPTION	REMARKS
1	496	1	Cone-diff. bearing (L.H.)	SL/SQHD series. Rear/Rear. Complete diff. bearing, seal & gasket kit for fast ratios.
2	497	1	Cone-diff. bearing (L.H.)	
3	493	2	Cup-diff. bearing (L.H.)	
4	72200C	1	Cone-inner bearing	
5	72487	2	Cup-inner & outer bearing	
6	72188C	2	Cone-outer bearing	
7	1228-F-552	1	Rear bearing-drive pinion	
8	A-1805-B-80	1	Oil seal assy.	

KIT 4010

ITEM	PART NO.	QTY.	DESCRIPTION	REMARKS
1	496	2	Cone-diff. bearing (L.H.)	SL/SQHD series. Rear/Rear. Complete diff. bearing, seal & gasket kit for standard ratios.
2	493	2	Cup-diff. bearing (L.H.)	
3	72200C	1	Cone-inner bearing	
4	72487	2	Cup-inner & outer bearing	
5	72188C	1	Cone-outer bearing	
6	1228-F-552	1	Rear bearing-drive pinion	
7	A-1805-B-80	1	Oil seal assy.	

KIT 4015

ITEM	PART NO.	QTY.	DESCRIPTION	REMARKS
1	496	2	Cone-diff. bearing (L.H.)	SL/SQHD series. Forward axle. Complete diff. bearing, seal & gasket kit for fast ratios.
2	497	1	Cone-diff. bearing (L.H.)	
3	493	2	Cup-diff. bearing (L.H.)	
4	72200C	2	Cone-inner & outer bearing	
5	72487	2	Cup-inner & outer bearing	
6	1228-F-552	1	Rear bearing-drive pinion	
7	29675	2	Cone-front bearing	
8	29630	2	Cup-front bearing	
9	31597	2	Cone-rear bearing	
10	31520	2	Cup-rear bearing	
11	1228-V-204	1	Bearing-front radial ball	
12	A-1205-L-714	1	Oil seal assy.	
13	A-1205-K-1779	1	Oil seal assy.-thru shaft	
14	LM-603049	2	Cone-bearing	
15	LM-603011	2	Cup-bearing	

KIT 4035

ITEM	PART NO.	QTY.	DESCRIPTION	REMARKS
1	JM-716649	2	Cone-diff. bearing	SL/SQ-100 series. Bearing, oil seal & gasket kit.
2	JM-716610	2	Cup-diff.bearing	
3	72212C	2	Cone-pinion bearing	
4	72487	2	Cup-pinion bearing	
5	1228-F-552	1	Bearing-Roller	
6	JLM-710949C	1	Cone-input shaft rear brg.	
7	JLM-710910	1	Cup-input shaft rear brg.	
8	JM-511946	1	Cone-input shaft brg. cage	
9	JM-511910	1	Cup-input shaft brg. cage	
10	A-1205-E-1227	1	Oil seal assy.-input brg. cage	
11	A-1205-V-1374	1	Oil seal assy.-thru shaft	

KIT 4040

ITEM	PART NO.	QTY.	DESCRIPTION		REMARKS
1	JM-716649	2	Cone-diff. bearing		SL/SQ-100 series.
2	JM-716610	2	Cup-diff. bearing		Bearing, oil seal & gasket kit.
3	65237	1	Cone-pinion brg.	inner	
4	72201C	1		outer	
5	65500	1	Cup-pinion brg.	inner	
6	72487	1		outer	
7	A-1205-B-1328	1	Oil seal assy.		

KIT 4045

ITEM	PART NO.	QTY.	DESCRIPTION		REMARKS
1	JM-716649	2	Cone-diff. bearing		SL/SQ-100 series.
2	JM-716610	2	Cup-diff. bearing		Bearing, oil seal & gasket kit.
3	65237	1	Cone-pinion brg.	inner	
4	72225C	1		outer	
5	65500	1	Cup-pinion brg.	inner	
6	72487	1		outer	
7	A-1205-U-1685	1	Oil seal assy.		

KIT 4055

ITEM	PART NO.	QTY.	DESCRIPTION	REMARKS
1	JM-716649	2	Cone-diff. bearing	SL/SQ-100 series.
2	JM-716610	2	Cup-diff.bearing	Bearing, oil seal & gasket kit.
3	72212C	2	Cone-pinion bearing	
4	72487	2	Cup-pinion bearing	
5	1228-F-552	1	Bearing-Roller	
6	JLM-710949C	1	Cone-input shaft rear brg.	
7	JLM-710910	1	Cup-input shaft rear brg.	
8	JM-511946	1	Cone-input shaft brg. cage	
9	JM-511910	1	Cup-input shaft brg. cage	
10	LM-603011	2	Cup-bearing	
11	LM-603049	2	Cone-bearing	
12	R9450080	1	Oil seal assy.-input brg. cage	
13	A-1205-G-2425	1	Triple lip oil seal assy.-output shaft	

KIT 4060

ITEM	PART NO.	QTY.	DESCRIPTION	REMARKS
1	JM-716649	2	Cone-diff. bearing	SL/SQ-100 series.
2	JM-716610	2	Cup-diff. bearing	Bearing, oil seal & gasket kit.
3	72212C	1	Cup-pinion brg. cage	
4	72487	1	Cone-pinion brg. cage	
5	A-1205-H-2426	1	Triple lip oil seal assy.	
6	1228-F-552	4	Bearing-roller	

KIT 4065

ITEM	PART NO.	QTY.	DESCRIPTION	REMARKS
1	JM-716649	2	Cone-diff. bearing	SL/SQ-100 series.
2	JM-716610	2	Cup-diff. bearing	Bearing, oil seal & gasket kit.
3	72212C	1	Cup-pinion brg. cage	
4	72487	1	Cone-pinion brg. cage	
5	A-1205-U-1685	1	Oil seal assy.	
6	1228-F-552	4	Bearing-roller	

SERVICE KITS

KIT 4075

ITEM	PART NO.	QTY.	DESCRIPTION	REMARKS
1	47820	2	Cup-diff. bearing (L.H. & R.H.)	SHR. Rear/Rear.
2	47890	2	Cone-diff. bearing (L.H. & R.H.)	Oil seal & bearing kit.
3	H-715343	1	Cone-drive pinion inner bearing	
4	H-715334	1	Cone-drive pinion outer bearing	
5	H-715311	2	Cup-drive pinion inner & outer bearing	
6	1228-X-154	1	Bearing-rear	
7	A1-1805-S-149	1	Oil seal-drive pinion	
8	A-1805-B-80	1	Oil seal-drive pinion	

KIT 4080

ITEM	PART NO.	QTY.	DESCRIPTION	REMARKS
1	47820	2	Cup-diff. bearing (L.H. & R.H.)	SHD. Forward/Rear, after July 1977.
2	47890	2	Cone-diff. bearing (L.H. & R.H.)	Oil seal & bearing kit.
3	H-715343	1	Cone-drive pinion inner bearing	
4	H-715311	1	Cup-drive pinion inner bearing	
5	A-1805-D-212	1	Oil seal-thru-shaft cage	
6	65500	1	Cup-drive pinion outer bearing	
7	65237	1	Cone-drive pinion outer bearing	
8	5-X-591	1	O-ring-input shaft	
9	R945007	1	Oil seal-input shaft	
10	JH-211749	1	Cone-input shaft	
11	JH-211710	1	Cup-input shaft	
12	JLM-714149	1	Cone-inter-axle diff.	
13	JLM-714110	1	Cup-inter-axle diff.	
14	JLM-104910	2	Bearing	
15	LM-104949	2	Cone	

KIT 4100

ITEM	PART NO.	QTY.	DESCRIPTION	REMARKS
1	47820	2	Cup-diff. bearing (L.H. & R.H.)	SHD. Forward/Rear. Before July 1977
2	47890	2	Cone-diff. bearing (L.H. & R.H.)	Oil seal & bearing kit.
3	1228-J-192	1	Bearing-thru-shaft cage rear	
4	H-715343	1	Cone-drive pinion inner bearing	
5	H-715311	1	Cup-drive pinion inner bearing	
6	A-1805-D-212	1	Oil seal-thru-shaft cage	
7	65500	1	Cup-drive pinion outer bearing	
8	65237	1	Cone-drive pinion outer bearing	
9	5-X-591	1	O-ring-input shaft	
10	R945008	1	Oil seal-input shaft	
11	JH-211749	1	Cone-input shaft	
12	JH-211710	1	Cup-input shaft	
13	JLM-714149	1	Cone-inter-axle diff.	
14	JLM-714110	1	Cup-inter-axle diff.	

KIT 4110

ITEM	PART NO.	QTY.	DESCRIPTION	REMARKS
1	598	1	Cone-diff. bearing (R.H.)	R/S-170. Bearing and oil seal kit. For use with carriers using a stamped steel pinion cage cover. All except 7.40 ratio.
2	592A	1	Cup-diff. bearing (R.H.)	
3	52387	1	Cone-diff. bearing (L.H.)	
4	52618	1	Cup-diff. bearing (L.H.)	
5	H-715343	1	Cone-drive pinion inner bearing	
6	H-715334	1	Cone-drive pinion outer bearing	
7	H-715311	2	Cup-drive pinion inner & outer bearing	
8	1228-B-262	1	Bearing-drive pinion spigot	
9	A-1805-F-162	1	Oil seal assembly-input	

KIT 4150

ITEM	PART NO.	QTY.	DESCRIPTION	REMARKS
1	598	1	Cone-diff. bearing (R.H.)	R/S-170. Bearing and oil seal kit. For use with carriers using the new integral pinion cage. All except 7.40 ratio.
2	592A	1	Cup-diff. bearing (R.H.)	
3	52387	1	Cone-diff. bearing (L.H.)	
4	52618	1	Cup-diff. bearing (L.H.)	
5	H-715343	1	Cone-drive pinion inner bearing	
6	H-715334	1	Cone-drive pinion outer bearing	
7	H-715311	2	Cup-drive pinion inner & outer bearing	
8	1228-B-262	1	Bearing-drive pinion spigot	
9	A-1205-Q-1915	1	Oil seal assembly-input	

KIT 4330

ITEM	PART NO.	QTY.	DESCRIPTION	REMARKS
1	55437	1	Cup-inner drive pinion bearing	H-172, L-172, H-173, L-173. Bearing and oil seal kit.
2	HM-804810	1	Cup-outer drive pinion bearing	
3	55200C	1	Cone-inner drive pinion bearing	
4	HM-804846	1	Cone-outer drive pinion bearing	
5	1228-F-552	1	Bearing-drive pinion spigot	
6	A-1205-D-1928	1	Oil seal assy.-bearing cage (New style)	
7	A-1205-J-1544	1	Oil seal assy.-bearing cage (Old style)	
8	JLM-714149	2	Cone-diff. bearing	
9	JLM-714110	2	Cup-diff. bearing	

SERVICE KITS

KIT LD 100 1032A

ITEM	PART NO.	QTY.	DESCRIPTION		REMARKS
1	A-1205-G-2425	1	Triple lip oil seal assy.-output shaft		Major overhaul kit for LD/LP-100 (with integral one-piece design inter-axle helical drive gear & forward side gear)
2	1229-A-2237	1	Snap ring-	.155	
3	1229-B-2238	1	thru-shaft	.158	
4	1229-C-2239	1		.161	
5	1229-D-2240	1		.164	
6	1229-E-2241	1		.167	
7	1229-F-2242	1		.170	
8	1229-G-2243	1		.173	
9	1229-H-2244	1		.176	
10	1229-J-2246	1		.179	
11	1229-K-2247	1		.182	
12	LM-603011	2	Cup-thru-shaft bearing		
13	LM-603049	2	Cone-thru-shaft bearing		
14	2208-C-445	1	Gasket-thru-shaft brg. cage		
15	JM-716610	2	Cup-diff. bearing		
16	JM-716649	2	Cone-diff. bearing		
17	3278-S-305	1	Spider-main diff.		
18	2234-D-966	2	Side gear-main diff.		
19	2233-U-151	4	Pinion-main diff.		
20	JLM-710910	1	Cup-input shaft bearing-rear		
21	JLM-710949C	1	Cone-input shaft bearing-rear		
22	1228-F-552	1	Spigot bearing-rear		
23	72212-C	2	Cone-pinion rear		
24	72487	2	Cup-pinion rear		
25	1227-N-898	1	Nut-drive pinion		
26	JM-511946	1	Cone-input bearing-forward		
27	JM-511910	1	Cup-input bearing-forward		
28	2208-X-440	2	Gasket-axle shaft		
29	A3-3235-F-1800	1	Differential case assy.		
30	3892-M-4927	1	Helical drive gear (integral)		
31	1229-M-4069	1	Thrust washer		
32	2234-E-1019	1	Side gear-rear		
33	A1-3297-Z-1014	1	Input shaft assy.		
34	2203-R-6518	1	Shim-input	.003	
35	2203-S-6519	1	bearing	.005	
36	2203-T-6520	1	cage	.010	
37	R945008	1	Oil seal assy.- input brg. cage		
38	1229-R-1032	4	Thrust washer-diff. pinion		
39	1229-T-1034	2	Thrust washer-diff. side gear		

KIT LHF 800B

1	A-1205-L-714	1	Oil seal assy.	Major differential overhaul kit.
2	1228-V-204	1	Bearing-front radial ball	
3	2208-E-447	1	Gasket	
4	1227-Z-936	1	Nut-thru-shaft	
5	2234-B-340	1	Side gear-rear	
6	2234-M-325	1	Side gear-forward	
7	3278-M-91	1	Spider-diff.	
8	2233-A-105	4	Pinion-diff.	
9	29630	2	Cup-front bearing	
10	29675	2	Cone-front bearing	
11	1229-U-1061	4	Washer-thrust	
12	1229-G-1619	1	Washer-rear side gear thrust	
13	1229-J-1622	1	Washer-forward side gear thrust	
14	1244-Y-701	1	Spacer-bearing	

KIT LR100 1314

ITEM	PART NO.	QTY.	DESCRIPTION		REMARKS
1	1227-R-902	1	Nut-pinion bearing		Major overhaul kit.
2	A-1205-U-1685	1	Oil seal assy.		
3	72212C	2	Cone-drive pinion inner & outer		
4	72487	2	Cup-drive pinion inner & outer		
5	JM716610	2	Cup-diff. bearing		
6	JM716649	2	Cone-diff. bearing		
7	2234-D-966	2	Side gear-diff.		
8	2233-U-151	4	Pinion-diff.		
9	3278-S-305	1	Spider - diff.		
10	2208-H-476	2	Gasket-axle shaft flange		
11	2203-S-7819	1	Spacer-pinion cage	.299	
12	2203-T-7820	1		.300	
13	2203-U-7821	1		.301	
14	2203-V-7822	1		.302	
15	2203-W-7823	1		.303	
16	2203-X-7824	1		.304	
17	2203-Y-7825	1		.310	
18	2203-Z-7826	1		.316	
19	2203-A-7827	1		.322	
20	2203-B-7828	1		.328	
21	2203-C-8115	1	Shim-input cage	.003	
22	2203-D-8116	3		.005	
23	2203-E-8117	4		.010	
24	1229-R-1032	4	Thrust washer-diff. pinion		
25	1229-T-1034	2	Thrust washer-diff. side gear		

KIT QAR 1039A

ITEM	PART NO.	QTY.	DESCRIPTION		REMARKS
1	1227-R-902	1	Nut-pinion bearing		Major overhaul kit (rigidized pinion)
2	A-1205-U-1685	1	Oil seal-pinion ret. & oil seal assy.		
3	72225C	1	Cone-pinion brg.	outer	
4	65237	1		inner	
5	72487	1	Cup-pinion brg.	outer	
6	65500	1		inner	
7	JM-716610	2	Cup-diff. bearing		
8	JM-716649	2	Cone-diff. bearing		
9	2234-C-783	2	Side gear-diff.		
10	1229-T-1034	2	Thrust washer-diff. side gear		
11	2233-U-151	4	Pinion-diff.		
12	1229-R-1032	4	Thrust washer-diff. pinion		
13	3278-S-305	1	Spider-diff.		
14	2208-X-440	2	Gasket-axle shaft flange		

SERVICE KITS

KIT QD 100 1032B

ITEM	PART NO.	QTY.	DESCRIPTION		REMARKS
1	A-1205-G-2425	1	Triple lip oil seal assy.-output shaft		Major overhaul kit for QHP, QD/QP-100 (with integral one-piece design inter-axle helical drive gear & forward side gear)
2	1229-A-2237	1	Snap ring-	.155	
3	1229-B-2238	1	thru-shaft	.158	
4	1229-C-2239	1		.161	
5	1229-D-2240	1		.164	
6	1229-E-2241	1		.167	
7	1229-F-2242	1		.170	
8	1229-G-2243	1		.173	
9	1229-H-2244	1		.176	
10	1229-J-2246	1		.179	
11	1229-K-2247	1		.182	
12	LM-603011	2	Cup-thru shaft bearing		
13	LM-603049	2	Cone-thru shaft bearing		
14	2208-C-445	1	Gasket-thru shaft cage		
15	JM-716610	2	Cup-diff. bearing		
16	JM-716649	2	Cone-diff. bearing		
17	3278-S-305	1	Spider-main diff.		
18	2234-C-783	2	Side gear-main diff.		
19	2233-U-151	4	Pinion-main diff.		
20	JLM-710910	1	Cup-input bearing-rear		
21	JLM-710949C	1	Cone-input bearing-rear		
22	1228-F-552	1	Spigot bearing-rear		
23	72212C	2	Cone-pinion rear		
24	72487	2	Cup-pinion		
25	1227-N-898	1	Nut-drive pinion		
26	JM-511946	1	Cone-input bearing-forward		
27	JM-511910	1	Cup-input bearing-forward		
28	2203-A-6319	3	Shim-input cage	.003	
29	2203-B-6320	4	bearing	.005	
30	2203-C-6321	1		.010	
31	2203-R-6518	1		.003	
32	2203-S-6519	1		.005	
33	2203-T-6520	1		.010	
34	2208-X-440	1	Gasket-axle shaft flange		
35	A3-3235-F-1800	1	Differential case assy.		
36	3892-M-4927	1	Helical drive gear (integral)		
37	1229-M-4069	1	Thrust washer		
38	2234-E-1019	1	Side gear-rear		
39	A1-3297-Z-1014	1	Input shaft assy.		
40	R945008	1	Oil seal assy.-input brg. cage		
41	1229-R-1032	4	Thrust washer-diff. pinion		
42	1229-T-1034	2	Thrust washer-diff. side gear		

KIT QD 100 1032C

ITEM	PART NO.	QTY.	DESCRIPTION		REMARKS
1	A-1205-G-2425	1	Triple lip oil seal assy.-output shaft		Major overhaul kit for QHP, QD/QP-100 (with integral one-piece design inter-axle helical drive gear & forward side gear)
2	1229-A-2237	1	Snap ring-	.155	
3	1229-B-2238	1	thru-shaft	.158	
4	1229-C-2239	1		.161	
5	1229-D-2240	1		.164	
6	1229-E-2241	1		.167	
7	1229-F-2242	1		.170	
8	1229-G-2243	1		.173	
9	1229-H-2244	1		.176	
10	1229-J-2246	1		.179	
11	1229-K-2247	1		.182	
12	LM-603011	2	Cup-thru-shaft bearing		
13	LM-603049	2	Cone-thru-shaft bearing		
14	2208-C-445	1	Gasket-thru-shaft cage		
15	JLM-710910	1	Cup-input bearing-rear		
16	JLM-710949C	1	Cone-input bearing-rear		
17	JM-511946	1	Cone-input bearing-forward		
18	JM-511910	1	Cup-input bearing-forward		
19	2203-A-6319	3	Shim-input cage	.003	
20	2203-B-6320	4	bearing	.005	
21	2203-C-6321	1		.010	
22	2203-R-6518	1		.003	
23	2203-S-6519	1		.005	
24	2203-T-6520	1		.010	
25	A3-3235-F-1800	1	Differential case assy.		
26	3892-M-4927	1	Helical drive gear (integral)		
27	1229-M-4069	1	Thrust washer		
28	2234-E-1019	1	Side gear-rear		
29	A1-3297-Z-1014	1	Input shaft assy.		
30	R945008	1	Oil seal assy.-input brg. cage		

SERVICE KITS

KIT QDF 800A

ITEM	PART NO.	QTY.	DESCRIPTION	REMARKS
1	A-1205-L-714	1	Oil seal assy.	Major differential overhaul kit.
2	493	2	Cup-diff. bearing	
3	496	2	Cone-diff bearing Fast ratios	
4	497	1	Cone-diff bearing Std. ratios	
5	LM-603011	2	Cup-bearing	
6	LM-603049	2	Cone-bearing	
7	2234-B-340	1	Side gear-rear	
8	2235-M-325	1	Side gear-forward	
9	3278-M-91	1	Spider-dif.	
10	2233-A-105	4	Pinion-diff.	
11	1228-V-204	1	Bearing-front radial ball	
12	A-1205-K-1779	1	Oil seal assy.-thru-shaft	
13	2233-U-151	4	Pinion-diff.	
14	3278-S-305	1	Spider-diff.	
15	2208-E-447	1	Gasket	
16	1227-Z-936	2	Nut	
17	31520	2	Cup-rear bearing	
18	31597	2	Cone-rear bearing	
19	29630	2	Cup-front bearing	
20	29675	2	Cone-front bearing	
21	2234-X-700	2	Side gear-diff.	
22	1227-N-898	1	Nut-drive pinion	
23	72200C	2	Cone-outer bearing	
24	72487	2	Cup-outer bearing	
25	1228-F-552	1	Bearing-drive pinion rear	
26	2208-Y-441	6	Gasket	
27	2208-X-440	4	Gasket	
28	2208-Z-416	4	Gasket	
29	2208-C-445	1	Gasket	
30	2208-D-446	1	Gasket	
31	2208-D-420	1	Gasket	
32	2208-E-421	1	Gasket	
33	2203-L-7448	1	Shim .003	
34	2203-K-7447	3	Shim .005	
35	2203-J-7446	4	Shim .010	
36	2203-R-3008	4	Shim .003	
37	2203-S-3009	1	Shim .010	
38	2203-T-8366	1	Shim	
39	1229-A-2237	1	Snap ring .155	
40	1229-B-2238	1	Snap ring .158	
41	1229-C-2239	1	Snap ring .161	
42	1229-D-2240	1	Snap ring .164	
43	1229-E-2241	1	Snap ring .167	
44	1229-F-2242	1	Snap ring .170	
45	1229-G-2243	1	Snap ring .173	
46	1229-H-2244	1	Snap ring .176	
47	1229-J-2246	1	Snap ring .179	
48	1229-K-2247	1	Snap ring .182	
49	1229-U-1061	4	Washer-thrust	
50	1229-G-1619	1	Washer-rear side gear thrust	
51	1229-J-1622	1	Washer-forward side gear thrust	
52	1244-Y-701	1	Spacer-bearing	
53	1229-R-1032	4	Washer-pinion thrust	
54	1229-T-1034	2	Washer-side gear thrust	

KIT QHP 1032

ITEM	PART NO.	QTY.	DESCRIPTION	REMARKS
1	JM-716610	2	Cup-diff. bearing	Major overhaul kit for QHP, QD/QP-100 (two-piece design inter-axle helical drive gear & forward side gear)
2	JM-716649	2	Cone-diff. bearing	
3	3278-S-305	1	Spider-main diff.	
4	2234-C-783	2	Side gear-main diff.	
5	2233-U-151	4	Pinion-main diff.	
6	16-X-118	1	Key-forward side gear	
7	1228-F-552	1	Spigot bearing-rear	
8	72212C	2	Cone-pinion rear	
9	72487	2	Cup-pinion	
10	1227-N-898	1	Nut-drive pinion	
11	JM-511946	1	Cone-input bearing-forward	
12	1199-Z-3146	1	Wear sleeve	
13	3208-Y-25	1	Gasket-pinion bearing cage	
14	2208-X-440	2	Gasket-axle shaft flange	
15	1229-R-1032	4	Thrust washer-main diff. pinion	
16	1229-T-1034	2	Thrust washer-diff. side gear	

KIT QHR 393

ITEM	PART NO.	QTY.	DESCRIPTION	REMARKS
1	493	2	Cup-diff. bearing	Major differential overhaul kit.
2	496	2	Cone-diff. bearing Fast ratios	
3	497	1	Cone-diff. bearing Std. ratios	
4	1227-Z-936	1	Nut-thru-shaft	
5	2234-X-700	2	Side gear-diff.	
6	A-1805-B-80	1	Oil seal assy.	
7	72188C	1	Cone-inner bearing	
8	72487	2	Cup-inner & outer bearing	
9	72200C	1	Cone-outer bearing	
10	3278-S-305	1	Spider-diff.	
11	1228-F-552	1	Beraing-drive pinion rear	
12	2233-U-151	4	Pinion-diff.	
13	2208-Y-441	4	Gasket	
14	2208-D-420	1	Gasket	
15	2208-E-421	1	Gasket	
16	2208-Z-416	4	Gasket	
17	2203-L-7448	1	Shim .003	
18	2203-K-7447	3	Shim .005	
19	2203-J-7446	4	Shim .010	
20	2203-T-8366	1	Shim	
21	1229-R-1032	4	Washer-pinion thrust	
22	1229-T-1034	2	Washer-side gear thrust	

SERVICE KITS

KIT QR100 1314

ITEM	PART NO.	QTY.	DESCRIPTION		REMARKS
1	1227-R-902	1	Nut-pinion bearing		Major overhaul kit.
2	A-1205-U-1685	1	Oil seal-pinion ret. & oil seal assy.		
3	72212C	2	Cone-pinion bearing - inner & outer		
4	72487	2	Cup-pinion bearing - inner & outer		
5	JM-716610	2	Cup-diff. bearing		
6	JM-716649	2	Cone-diff. bearing		
7	2234-C-783	2	Side gear-diff.		
8	2233-U-151	4	Pinion-diff.		
9	3278-S-305	1	Spider-diff.		
10	2208-X-440	2	Gasket-axle shaft flange		
11	2203-C-8115	1	Shim-input cage	.003	
12	2203-D-8116	3		.005	
13	2203-E-8117	4		.010	
14	2203-B-9804	1		.020	
15	2203-S-7819	1	Spacer-pinion cage	.299	
16	2203-T-7820	1		.300	
17	2203-U-7821	1		.301	
18	2203-V-7822	1		.302	
19	2203-W-7823	1		.303	
20	2203-X-7824	1		.304	
21	2203-Y-7825	1		.310	
22	2203-Z-7826	1		.316	
23	2203-A-7827	1		.322	
24	2203-B-7828	1		.328	
25	1228-F-552	1	Bearing-roller		
26	1229-R-1032	4	Thrust washer-diff. pinion		
27	1229-T-1034	2	Thrust washer-diff. side gear		

KIT QRD 100 1032

ITEM	PART NO.	QTY.	DESCRIPTION		REMARKS
1	A-1205-G-2425	1	Triple lip oil seal assy.-output shaft		Major overhaul kit for QRD/QRP-100 (with integral one-piece design inter-axle helical drive gear & forward side gear)
2	1229-A-2237	1	Snap ring-	.155	
3	1229-B-2238	1	thru-shaft	.158	
4	1229-C-2239	1		.161	
5	1229-D-2240	1		.164	
6	1229-E-2241	1		.167	
7	1229-F-2242	1		.170	
8	1229-G-2243	1		.173	
9	1229-H-2244	1		.176	
10	1229-J-2246	1		.179	
11	1229-K-2247	1		.182	
12	LM-603011	2	Cup-thru shaft bearing		
13	LM-603049	2	Cone-thru shaft bearing		
14	2208-C-445	1	Gasket-thru shaft brg. cage		
15	JM-716610	2	Cup-diff. bearing		
16	JM-716649	2	Cone-diff. bearing		
17	2234-F-1046	2	Side gear-diff.		
18	2233-J-1024	4	Pinion-diff.		
19	3278-S-305	1	Spider-diff.		
20	1229-R-1032	4	Thrust washer-diff. pinion		
21	1229-T-1034	2	Thrust washer-diff. side gear		
22	JLM-710910	1	Cup-input bearing-rear		
23	JLM-710949C	1	Cone-input bearing-rear		
24	A3-3235-F-1800	1	Differential case assy.		
25	3892-M-4927	1	Helical drive gear (integral)		
26	1229-M-4069	1	Thrust washer		
27	2234-E-1019	1	Side gear-rear		
28	A1-3297-Z-1014	1	Input shaft assy.		
29	R945008	1	Oil seal assy.-input brg. cage		
30	1228-F-552	1	Spigot bearing-rear		
31	72212C	2	Cone-pinion rear		
32	72487	2	Cup-pinion rear		
33	1227-N-898	1	Nut-drive pinion		
34	JM-511946	1	Cone-input bearing-forward		
35	JM-511910	1	Cup-input bearing-forward		
36	2203-A-6319	3	Shim-input cage	.003	
37	2203-B-6320	4	bearing	.005	
38	2203-C-6321	1		.010	
39	2203-R-6518	1		.003	
40	2203-S-6519	1		.005	
41	2203-T-6520	1		.010	
42	2208-X-440	2	Gasket-axle shaft		

SERVICE KITS

KIT QRR100 1314

ITEM	PART NO.	QTY.	DESCRIPTION		REMARKS
1	1227-R-902	1	Nut-pinion bearing		Major overhaul kit.
2	A-1205-U-1685	1	Oil seal assy.		
3	72212C	2	Cone-drive pinion inner & outer		
4	72487	2	Cup-drive pinion inner & outer		
5	JM-716610	2	Cup-diff. bearing		
6	JM-716649	2	Cone-diff. bearing		
7	1229-T-1034	2	Thrust washer-diff. side gear		
8	2234-F-1046	2	Side gear-diff.		
9	2233-J-1024	4	Pinion-diff.		
10	1229-R-1032	4	Thrust washer-diff. pinion		
11	3278-S-305	1	Spider-diff.		
12	2208-X-440	2	Gasket-axle shaft		
13	2203-C-8115	1	Shim-input cage	.003	
14	2203-D-8116	3		.005	
15	2203-E-8117	4		.010	
16	2203-B-9804	1		.020	
17	2203-S-7819	1	Spacer-pinion cage	.299	
18	2203-T-7820	1		.300	
19	2203-U-7821	1		.301	
20	2203-V-7822	1		.302	
21	2203-W-7823	1		.303	
22	2203-X-7824	1		.304	
23	2203-Y-7825	1		.310	
24	2203-Z-7826	1		.316	
25	2203-A-7827	1		.322	
26	2203-B-7828	1		.328	

KIT R170

ITEM	PART NO.	QTY.	DESCRIPTION		REMARKS
1	598	1	Cone-diff. bearing (R.H.)		Major overhaul kit.
2	592A	1	Cup-diff. bearing (R.H.)		For use with carriers using a
3	52387	1	Cone-diff. bearing (L.H.)		stamped steel pinion cage cover.
4	52618	1	Cup-diff. bearing (L.H.)		All except 7.40 ratio.
5	H-715343	1	Cone-drive pinion inner bearing		
6	H-715334	1	Cone-drive pinion outer bearing		
7	H-715311	2	Cup-drive pinion inner & outer bearing		
8	1228-B-262	1	Bearing-drive pinion spigot		
9	A-1805-F-162	1	Oil seal assembly-input		
10	1227-D-940	1	Nut-drive pinion		
11	2234-F-344	2	Side gear-differential		
12	2233-U-99	4	Pinion-differential		
13	3278-A-79	1	Spider-differential		
14	1229-D-992	4	Washer-diff. pinion thrust		
15	1229-E-993	2	Washer-diff. side gear thrust		
16	2208-D-1096	1	Gasket-carrier to housing		
17	2208-X-440	4	Gasket-axle shaft to hub		
18	2208-Y-441	3	Gasket-housing plug gasket		
19	2203-L-1260	1	Shim-	.003	
20	2203-A-469	1	pinion cage	.005	
21	2203-B-470	3		.010	
22	2208-H-424	1	Gasket-pinion cage cover		

KIT R170A

ITEM	PART NO.	QTY.	DESCRIPTION	REMARKS
1	598	1	Cone-diff. bearing (R.H.)	Major overhaul kit.
2	592A	1	Cup-diff. bearing (R.H.)	For use with carriers using a
3	52387	1	Cone-diff. bearing (L.H.)	stamped steel pinion cage cover.
4	52618	1	Cup-diff. bearing (L.H.)	7.40 ratio only.
5	H-715343	1	Cone-drive pinion inner bearing	
6	H-715334	1	Cone-drive pinion outer bearing	
7	H-715311	2	Cup-drive pinion inner & outer bearing	
8	1228-A-261	1	Bearing-drive pinion spigot	
9	A-1805-F-162	1	Oil seal assembly-input	
10	1227-D-940	1	Nut-drive pinion	
11	2234-F-344	2	Side gear-differential	
12	2233-U-99	4	Pinion-differential	
13	3278-A-79	1	Spider-differential	
14	1229-D-992	4	Washer-diff. pinion thrust	
15	1229-E-993	2	Washer-diff. side gear thrust	
16	2208-D-1096	1	Gasket-carrier to housing	
17	2208-X-440	4	Gasket-axle shaft to hub	
18	2208-Y-441	3	Gasket-housing plug gasket	
19	2203-L-1260	1	Shim- .003	
20	2203-A-469	1	pinion cage .005	
21	2203-B-470	3	.010	
22	2208-H-424	1	Gasket-pinion cage cover	

SERVICE KITS

KIT SHD 1162A

ITEM	PART NO.	QTY.	DESCRIPTION		REMARKS
1	47820	2	Cup-diff. bearing (L.H. & R.H.)		Major overhaul kit.
2	47890	2	Cone-diff. bearing (L.H. & R.H.)		
3	1229-E-993	2	Thrust washer-side gear		
4	2234-F-344	2	Side gear-diff.		
5	1229-D-992	4	Thrust washer-pinion gear		
6	2233-U-99	4	Pinion gear		
7	3278-A-79	1	Spider-diff.		
8	1228-J-192	1	Bearing-thru-shaft cage rear		
9	A-1805-D-212	1	Oil seal-thru-shaft cage		
10	H-715343	1	Cone-drive pinion inner bearing		
11	H-715311	1	Cup-drive pinion inner bearing		
12	65500	1	Cup-drive pinion outer bearing		
13	65237	1	Cone-drive pinion outer bearing		
14	1229-S-1605	1	Washer-drive pinion nut		
15	1227-D-940	1	Nut-drive pinion		
16	1229-M-2769	1	Thrust washer-input shaft		
17	3278-V-1088	1	Spider-inter-axle diff.		
18	2233-W-153	4	Pinion-inter-axle diff.		
19	1229-T-1606	4	Washer-inter-axle diff. pinion		
20	2234-M-793	1	Side gear-inter-axle diff. rear		
21	2208-F-500	1	Gasket-drive pinion cover		
22	2203-F-2788	4	Shim-drive	.003	
23	2203-G-2789	2	pinion	.005	
24	2203-H-2790	4		.010	
25	5-X-591	1	O-ring-input shaft		
26	2208-M-429	1	Gasket-chamber to housing		
27	R945007	1	Oil seal-input shaft		
28	2203-Q-6803	3	Shim-input	.003	
29	2203-R-6804	4	bearing	.005	
30	2203-S-6805	4	cage	.010	
31	JH-211749	1	Cone-input shaft		
32	JH-211710	1	Cup-input shaft		
33	JLM-714149	1	Cone-inter-axle diff.		
34	JLM-714110	1	Cup-inter-axle diff.		
35	2208-C-445	1	Gasket		
36	1229-V-2570	1	Retainer-spider	Old style	
37	1229-L-4354	1		New style	
38	1229-W-1245	1	Washer-shift housing		
39	A-1205-A-1925	1	Oil seal		

KIT SHD 1162B

ITEM	PART NO.	QTY.	DESCRIPTION		REMARKS
1	H-715343	1	Cone-drive pinion inner bearing		Overhaul kit.
2	H-715311	1	Cup-drive pinion inner bearing		
3	65500	1	Cup-drive pinion outer bearing		
4	65237	1	Cone-drive pinion outer bearing		
5	1229-S-1605	1	Washer-drive pinion nut		
6	1227-D-940	1	Nut-drive pinion		
7	1229-M-2769	1	Thrust washer-input shaft		
8	3278-V-1088	1	Spider-inter-axle diff.		
9	2233-W-153	4	Pinion-inter-axle diff.		
10	1229-T-1606	4	Washer-inter-axle diff. pinion		
11	2234-M-793	1	Side gear-inter-axle diff. rear		
12	2208-F-500	1	Gasket-drive pinion cover		
13	5-X-591	1	O-ring-input shaft		
14	2208-M-429	1	Gasket-chamber to housing		
15	R945007	1	Oil seal-input shaft		
16	2203-Q-6803	3	Shim-input	.003	
17	2203-R-6804	4	bearing	.005	
18	2203-S-6805	4	cage	.010	
19	JH-211749	1	Cone-input shaft		
20	JH-211710	1	Cup-input shaft		
21	JLM-714149	1	Cone-inter-axle diff.		
22	JLM-714110	1	Cup-inter-axle diff.		
23	1229-V-2570	1	Retainer-spider	Old style	
24	1229-L-4354	1		New style	
25	1229-W-1245	1	Washer-shift housing		
26	A-1205-A-1925	1	Oil seal		

SERVICE KITS

KIT SHD 1162C

ITEM	PART NO.	QTY.	DESCRIPTION		REMARKS
1	47820	2	Cup-diff. bearing (L.H. & R.H.)		Major overhaul kit.
2	47890	2	Cone-diff. bearing (L.H. & R.H.)		
3	1229-E-993	2	Thrust washer-side gear		
4	2234-K-271	2	Side gear-diff.		
5	1229-D-992	4	Thrust washer-pinion gear		
6	2233-U-99	4	Pinion gear		
7	3278-A-79	1	Spider-diff.		
8	1228-J-192	1	Bearing-thru-shaft cage rear		
9	A-1805-D-212	1	Oil seal-thru-shaft cage		
10	H-715343	1	Cone-drive pinion inner bearing		
11	H-715311	1	Cup-drive pinion inner bearing		
12	65500	1	Cup-drive pinion outer bearing		
13	65237	1	Cone-drive pinion outer bearing		
14	1229-S-1605	1	Washer-drive pinion nut		
15	1227-D-940	1	Nut-drive pinion		
16	1229-M-2769	1	Thrust washer-input shaft		
17	3278-V-1088	1	Spider-inter-axle diff.		
18	2233-W-153	4	Pinion-inter-axle diff.		
19	1229-T-1606	4	Washer-inter-axle diff. pinion		
20	2234-M-793	1	Side gear-inter-axle diff. rear		
21	2208-F-500	1	Gasket-drive pinion cover		
22	2203-F-2788	4	Shim-drive	.003	
23	2203-G-2789	2	pinion	.005	
24	2203-H-2790	4		.010	
25	5-X-591	1	O-ring-input shaft		
26	2208-M-429	1	Gasket-chamber to housing		
27	R945007	1	Oil seal-input shaft		
28	2203-Q-6803	3	Shim-input	.003	
29	2203-R-6804	4	bearing	.005	
30	2203-S-6805	4	cage	.010	
31	JH-211749	1	Cone-input shaft		
32	JH-211710	1	Cup-input shaft		
33	JLM-714149	1	Cone-inter-axle diff.		
34	JLM-714110	1	Cup-inter-axle diff.		
35	2208-C-445	1	Gasket		
36	1229-V-2570	1	Retainer-spider	Old style	
37	1229-L-4354	1		New style	
38	1229-W-1245	1	Washer-shift housing		
39	A-1205-A-1925	1	Oil seal		

KIT SHF 585

ITEM	PART NO.	QTY.	DESCRIPTION	REMARKS
1	47820	2	Cup-diff. bearing (L.H. & R.H.)	Major overhaul kit.
2	47890	2	Cone-diff. bearing (L.H. & R.H.)	
3	1229-E-993	2	Thrust washer-side gear	
4	2234-K-271	2	Side gear-diff.	
5	1229-D-992	4	Thrust washer-pinion gear	
6	2233-U-99	4	Pinion gear	
7	3278-A-79	1	Spider-diff.	
8	1228-J-192	1	Bearing-thru-shaft cage rear	
9	A-1805-D-212	1	Oil seal-thru-shaft cage	
10	H-715343	1	Cone-drive pinion inner bearing	
11	H-715311	1	Cup-drive pinion inner bearing	
12	65500	1	Cup-drive pinion outer bearing	
13	65237	1	Cone-drive pinion outer bearing	
14	1229-S-1605	1	Washer-drive pinion nut	
15	1227-D-940	1	Nut-drive pinion	
16	1229-M-2769	1	Thrust washer-input shaft	
17	1205-A-911	1	O-ring-input shaft	
18	R945007	1	Oil seal-input shaft	
19	1228-P-458	1	Bearing-input shaft cage (roller)	
20	1229-L-1598	1	Snap ring-bearing	
21	A-1228-N-326	1	Bearing-inter-axle & race assy.	
22	1229-R-1604	1	Snap ring-inter-axle diff.	
23	1229-C-1407	1	Snap ring-inter-axle diff. shift housing	
24	2208-X-440	4	Gasket	
25	2208-Y-415	1	Gasket	
26	2208-F-500	1	Gasket	
27	2208-G-501	1	Gasket	
28	2208-M-429	1	Gasket	
29	2203-F-2788	4	Shim .003	
30	2203-G-2789	2	Shim .005	
31	2203-H-2790	4	Shim .010	
32	2203-G-4089	3	Shim .003	
33	2203-H-4090	4	Shim .005	
34	5-X-591	1	Felt	

SERVICE KITS

KIT SHF 585D

ITEM	PART NO.	QTY.	DESCRIPTION	REMARKS
1	47820	2	Cup-diff. bearing (L.H. & R.H.)	Major overhaul kit.
2	47890	2	Cone-diff. bearing (L.H. & R.H.)	
3	1229-E-993	2	Thrust washer-side gear	
4	2234-F-344	2	Side gear-diff.	
5	1229-D-992	4	Thrust washer-pinion gear	
6	2233-U-99	4	Pinion gear	
7	3278-A-79	1	Spider-diff.	
8	1228-J-192	1	Bearing-thru-shaft cage rear	
9	A-1805-D-212	1	Oil seal-thru-shaft cage	
10	H-715343	1	Cone-drive pinion inner bearing	
11	H-715311	1	Cup-drive pinion inner bearing	
12	65500	1	Cup-drive pinion outer bearing	
13	65237	1	Cone-drive pinion outer bearing	
14	1229-S-1605	1	Washer-drive pinion nut	
15	1227-D-940	1	Nut-drive pinion	
16	1229-M-2769	1	Thrust washer-input shaft	
17	3278-Y-129	1	Spider-inter-axle diff.	
18	2233-W-153	4	Pinion-inter-axle diff.	
19	1229-T-1606	4	Washer-inter-axle diff. pinion	
20	2234-F-604	1	Side gear-inter-axle diff. rear	
21	1205-A-911	1	O-ring-input shaft	
22	R945007	1	Oil seal-input shaft	
23	1228-P-458	1	Bearing-input shaft cage (roller)	
24	1229-L-1598	1	Snap ring-bearing	
25	1229-N-1600	1	Washer	
26	A-1228-N-326	1	Bearing-inter-axle & race assy.	
27	1229-R-1604	1	Snap ring-inter-axle diff.	
28	1229-C-1407	1	Snap ring-inter-axle diff. shift housing	
29	2208-X-440	4	Gasket	
30	2208-Y-415	1	Gasket	
31	2208-F-500	1	Gasket	
32	2208-G-501	1	Gasket	
33	2208-M-429	1	Gasket	
34	2203-F-2788	4	Shim .003	
35	2203-G-2789	2	Shim .005	
36	2203-H-2790	4	Shim .010	
37	2203-G-4089	3	Shim .003	
38	2203-H-4090	4	Shim .005	
39	5-X-591	1	Felt	

KIT SHF 1162

ITEM	PART NO.	QTY.	DESCRIPTION		REMARKS
1	47820	2	Cup-diff. bearing (L.H. & R.H.)		Major overhaul kit.
2	47890	2	Cone-diff. bearing (L.H. & R.H.)		
3	1229-E-993	2	Thrust washer-side gear		
4	2234-F-344	2	Side gear-diff.		
5	1229-D-992	4	Thrust washer-pinion gear		
6	2233-U-99	4	Pinion gear		
7	3278-A-79	1	Spider-diff.		
8	A-1805-D-212	1	Oil seal-thru-shaft cage		
9	H-715343	1	Cone-drive pinion inner bearing		
10	H-715311	1	Cup-drive pinion inner bearing		
11	65500	1	Cup-drive pinion outer bearing		
12	65237	1	Cone-drive pinion outer bearing		
13	1229-S-1605	1	Washer-drive pinion nut		
14	1227-D-940	1	Nut-drive pinion		
15	2208-F-500	1	Gasket-drive pinion cover		
16	2203-F-2788	4	Shim-drive	.003	
17	2203-G-2789	2	pinion	.005	
18	2203-H-2790	4		.010	
19	R945007	1	Oil seal-input shaft		
20	A-1205-A-1925	1	Oil seal		

KIT SHR 606

ITEM	PART NO.	QTY.	DESCRIPTION		REMARKS
1	47820	2	Cup-diff. bearing (L.H. & R.H.)		Major overhaul kit.
2	47890	2	Cone-diff. bearing (L.H. & R.H.)		
3	1229-E-993	2	Thrust washer-side gear		
4	2234-K-271	2	Side gear-diff.		
5	1229-D-992	4	Thrust washer-pinion gear		
6	2233-U-99	4	Pinion gear		
7	3278-A-79	1	Spider-diff.		
8	H-715343	1	Cone-drive pinion inner bearing		
9	H-715311	2	Cup-drive pinion inner & outer bearing		
10	H-715334	1	Cone-drive pinion outer bearing		
11	1227-A-937	1	Nut-drive pinion		
12	1228-X-154	1	Bearing-rear		
13	1229-U-1113	1	Lock ring-rear bearing		
14	A1-1805-S-149	1	Oil seal-drive pinion		
15	A-1205-P-1914	1	Oil seal-drive pinion (triple lip)		
16	A-1805-B-80	1	Oil seal-drive pinion		
17	2208-X-440	4	Gasket		
18	2208-Y-415	1	Gasket		
19	2208-H-424	1	Gasket		
20	2203-L-1260	1	Shim	.003	
21	2203-A-469	1	Shim	.005	
22	2203-B-470	3	Shim	.010	

SERVICE KITS

KIT SHR 606A

ITEM	PART NO.	QTY.	DESCRIPTION	REMARKS
1	47820	2	Cup-diff. bearing (L.H. & R.H.)	Major overhaul kit.
2	47890	2	Cone-diff. bearing (L.H. & R.H.)	
3	1229-E-993	2	Thrust washer-side gear	
4	2234-F-344	2	Side gear-diff.	
5	1229-D-992	4	Thrust washer-pinion gear	
6	2233-U-99	4	Pinion gear	
7	3278-A-79	1	Spider-diff.	
8	H-715343	1	Cone-drive pinion inner bearing	
9	H-715311	2	Cup-drive pinion inner & outer bearing	
10	H-715334	1	Cone-drive pinion outer bearing	
11	1227-A-937	1	Nut-drive pinion	
12	1228-X-154	1	Bearing-rear	
13	1229-U-1113	1	Lock ring-rear bearing	
14	A1-1805-S-149	1	Oil seal-drive pinion	
15	A-1205-P-1914	1	Oil seal-drive pinion (triple lip)	
16	A-1805-B-80	1	Oil seal-drive pinion	
17	2208-X-440	4	Gasket	
18	2208-Y-415	1	Gasket	
19	2208-H-424	1	Gasket	
20	2203-L-1260	1	Shim .003	
21	2203-A-469	1	Shim .005	
22	2203-B-470	3	Shim .010	

MPS 1842

ITEM	PART NO.	QTY.	DESCRIPTION	REMARKS
1	A1-3226-Q-537	1	Rear bearing cage, oil seal, thru-shaft, bearing & snap ring assy.	SL/SQHD series. Changes single & double row ball bearing to double row tapered bearing at output cage of inter-axle differential.
2	2208-C-445	1	Gasket	
3	1229-K-1597	4	Washer-thru-shaft cage	
4	S-268-2	4	Capscrew-thru-shaft cage	
5	1227-Z-936	1	Nut-thru-shaft	

MPS 2259

ITEM	PART NO.	QTY.	DESCRIPTION	REMARKS
1	2234-M-793	1	Side gear-rear	SSHD. Forward/Rear. 1420 & 1162 carriers. Input shaft repair kit.
2	5-X-591	1	O-ring-input shaft	
3	R945007	1	Oil seal-input shaft	
4	2203-Q-6803	4	Shim-input .003	
5	2203-R-6804	3	bearing .005	
6	2203-S-6805	5	cage .010	
7	JH-211749	1	Cone-input shaft	
8	JLM-714149	1	Cone-diff.	
9	JLM-714110	1	Cup-diff.	
10	A1-2297-D-862	1	Shift fork assy.	
11	1229-N-1730	1	Washer-input shaft	
12	A8-3280-N-6748	1	Input shaft assy.	
13	A-3226-R-1162	1	Bearing cage-input shaft	
14	1227-D-940	1	Nut-input shaft	

MPS 2294

ITEM	PART NO.	QTY.	DESCRIPTION	REMARKS
1	A1-3235-T-1528	1	Inter-axle diff. case & nest assy.	SL/SQHD series. Upgrade inter-axle diff. to new style bearing case design-improved lube design.
2	A-3226-F-708	1	Bearing cage	
3	2203-R-3008	2	Shim-bearing cage .003	
4	2203-S-3009	1	Shim-bearing cage .010	
5	1250-Z-416	1	Plug	
6	A-1205-L-714	1	Oil seal assy.	
7	1244-Y-701	1	Spacer-bearing	

MPS 2388

ITEM	PART NO.	QTY.	DESCRIPTION	REMARKS
1	1244-Z-1534	1	Spacer	SL/SQHD series. Inter-axle diff. hi-lube dam installation kit.
2	2264-A-1	1	Deflector	
3	2203-Y-7591	1	Shim	

MPS 2401

ITEM	PART NO.	QTY.	DESCRIPTION	REMARKS
1	A2-3280-U-8081	1	Gear cover & oil pump assy.	SL/SQ-100 series. Oil pump gear cover kit.
2	3280-V-6964	1	Oil filter shield	
3	2203-R-6518	1	Shim-input brg. cage .003	
4	2203-S-6519	1	Shim-input brg. cage .005	
5	2203-T-6520	1	Shim-input brg. cage .010	
6	R945008	1	Oil seal assy.-input shaft	
7	2244-E-83	1	Shaft-shift	
8	A-3296-T-150	1	Shift fork	

MPS 2438

ITEM	PART NO.	QTY.	DESCRIPTION	REMARKS
1	A1-2297-B-4240	1	Idler pump shaft & drive gear assy.	SL/SQ-100 series. Oil pump kit with 3/4" wide pump gears.
2	1229-G-2763	1	Snap ring	
3	3892-Z-4368	1	Gear	
4	3892-A-4369	1	Gear-driven	
5	1244-V-1712	1	Spacer	

MPS 2637

ITEM	PART NO.	QTY.	DESCRIPTION	REMARKS
1	A1-2297-D-862	1	Shift fork assy.	SSHD. Shift update kit.
2	3107-E-1071	1	Clutch collar	
3	A-3226-R-1162	1	Bearing cage	

MPS 2997

ITEM	PART NO.	QTY.	DESCRIPTION	REMARKS
1	A-3235-F-1800	1	Differential case assy.	SL/SQ-100 series. Inter-axle diff. update kit.
2	2234-E-1019	1	Gear-rear side	
3	3892-F-4738	1	Gear-integral spur & bevel	
4	1229-H-2764	1	Washer-thrust	

SERVICE KITS

MPS 3344

ITEM	PART NO.	QTY.	DESCRIPTION	REMARKS
1	A3-3235-F-1800	1	Differential case assy.	Update old style input shaft to new style for QD-100, LD-100 and QRD-100
2	3892-M-4927	1	Gear-spur	
3	1229-M-4069	1	Washer-thruse	
4	2234-E-1019	1	Side gear-rear	
5	A1-3297-Z-1014	1	Input shaft assy.	
6	2203-R-6518	1	Shim-input brg. cage .003	
7	2203-S-6519	1	Shim-input brg. cage .005	
8	2203-T-6520	1	Shim-input brg. cage .010	
9	R945008	1	Oil seal assy.-input shaft	

MPS 3345

ITEM	PART NO.	QTY.	DESCRIPTION	REMARKS
1	A3-3235-F-1800	1	Differential case assy.	Update old style input shaft to new style for QHP,LP-100, QP-100 and QRP-100
2	3892-M-4927	1	Gear-spur	
3	1229-M-4069	1	Washer-thruse	
4	2234-E-1019	1	Side gear-rear	
5	A1-3297-A-1015	1	Input shaft assy.	
6	2203-R-6518	1	Shim-input brg. cage .003	
7	2203-S-6519	1	Shim-input brg. cage .005	
8	2203-T-6520	1	Shim-input brg. cage .010	
9	R945008	1	Oil seal assy.-input shaft	

NO SPIN CHART

MODEL	CARRIER	SPLINE	NO SPIN NUMBER
C-100	3200-P-484	1.625-16	**A-3230-U-47**
C-102	3200-P-484	1.660-32	**A5-3235-Y-1481 (2)**
D & F	3200-A-1093	1.750-16	**A1-3235-T-384**
D & F	3200-R-1110	1.750-16	**A1-3235-T-384**
D & F	3200-A-1093	1.769-19	**A3-3235-F-474**
D & F	3200-R-1110	1.769-19	**A3-3235-F-474**
D & F	3200-A-1093	1.769-34	**A-3230-T-46**
D & F	3200-R-1110	1.769-34	**A-3230-T-46**
D & F	3200-S-1111	1.769-34	**A-3230-T-46**
D & F	3200-S-1111	1.770-19	**A3-3235-F-474**
D & F	3200-U-1113	1.770-19	**A3-3235-F-474**
H-172	3200-Y-1091	2.000-39	**A-3230-G-33 (2)**
LD-100	3200-R-1032	2.000-39	**A-3230-G-33 (2)**
LHD	3200-T-800	2.000-21	**A-3230-A-1**
LHD	3200-U-801	2.000-21	**A-3230-A-1**
LHR	3200-C-393	2.000-21	**A-3230-A-1**
QAR	3200-Y-1039	2.100-41	**A-3230-L-38**
QAR	3200-N-1080	2.100-41	**A-3230-L-38**
QD-100	3200-R-1032	2.100-41	**A-3230-L-38**
QHD	3200-T-800	2.125-22	**A-3230-B-2**
QHD	3200-U-801	2.125-22	**A-3230-B-2**
QHP	3200-R-1032	2.100-41	**A-3230-L-38**
QHR	3200-C-393	2.125-22	**A-3230-B-2**
QR-100	3200-N-1314	2.100-41	**A-3230-L-38**
QR-100	3200-T-1346	2.100-41	**A-3230-L-38**
R-170	3200-E-603	2.375-24	**A-3230-W-23**
R-170	3200-G-605	2.375-24	**A-3230-W-23**
R-170	3200-G-605	2.500-25	**A-3230-Y-25**
SHD	3200-M-585	2.250-23	**A-3230-V-22 (2)**
SHD	3200-R-1162	2.250-23	**A-3230-V-22 (2)**
SHD	3200-P-1420	2.250-23	**A-3230-V-22 (2)**
SHD	3200-M-585	2.375-24	**A12-3235-S-539**
SHD	3200-R-1162	2.375-24	**A-3230-W-23**
SHD	3200-P-1420	2.375-24	**A-3230-W-23**
SHR	3200-C-1433	2.250-23	**A-3230-V-22**
SHR	3200-H-606	2.375-24	**A-3230-W-23**
SHR	3200-C-1433	2.375-24	**A-3230-W-23**
THD	3200-R-1162	2.250-23	**A-3230-V-22 (2)**
THD	3200-R-1162	2.375-24	**A-3230-W-23**
UHD	3200-R-1162	2.250-23	**A-3230-V-22 (2)**
UHD	3200-M-1235	2.375-24	**A-3230-W-23**
UHD	3200-R-1162	2.375-24	**A-3230-W-23**

(2) No longer available

Numerical Parts Index

Part Number	Page
3-X-338	1-44
4-X-1445	2-9
4-X-1707	1-32
5-X-591	1-41
10-X-382	1-35
10-X-720	1-24
10-X-1021	1-20, 1-24
10-X-1022	1-14
10-X-1023	1-35
10-X-1027	1-19
10-X-1028	1-19
10-X-1032	1-27
10-X-1334	1-31
10-X-1594	1-42, 2-10, 2-11, 2-12
10-X-1599	1-7, 2-9
13-X-13	1-3
13-X-41	1-20, 1-24, 1-29, 1-35, 1-38, 1-42, 1-49
13-X-163	1-19
15-X-387	1-27
15-X-851	1-19
15-X-1025	1-20, 1-24, 1-29, 1-38, 1-42, 1-49
15-X-1026	1-3
15-X-1167	1-14
15-X-1306	1-19
15-X-1337	1-45
15-X-1474	1-50
15-X-1522	1-14
15-X-1523	1-10, 1-12, 1-20, 1-24, 1-28, 1-36, 1-39
15-X-1558	1-28, 1-31, 1-35
15-X-1626	1-28, 1-39
15-X-1707	1-44
15-X-1728	1-8
17-X-234	1-42
19-X-136	1-16
A-1199-C-1043	2-2, 2-3, 2-4, 2-5
1199-V-1296	2-10
A-1199-P-1394	2-6, 2-7, 2-8, 2-9, 2-10, 2-11, 2-12
1199-Z-1430	1-49
1199-B-1666	2-9, 2-10
1199-V-1712	1-19, 1-45
A-1199-Q-1785	3-4
A-1199-S-1917	3-9, 3-10
1199-R-2176	1-3, 1-7, 1-20, 1-24, 1-27, 1-35, 1-38
1199-M-2457	1-10, 1-12, 1-44, 1-49
1199-R-3346	1-31
1199-E-3359	1-47
A-1199-V-3402	1-31
A-1205-B-574	2-6

Part Number	Page
A-1205-N-612	3-9, 3-10
A-1205-K-635	1-6
A-1205-G-683	1-3
A-1205-T-696	2-9, 2-10
A-1205-L-714	1-21
A-1205-G-735	2-2
A-1205-L-740	3-4
A-1205-E-1227	1-31
A-1205-W-1349	2-7, 2-10, 2-11
A-1205-V-1374	1-27
A-1205-T-1502	2-4
A-1205-S-1527	1-3, 1-6
A-1205-J-1544	1-9, 1-11
A-1205-W-1557	2-5
A-1205-U-1685	1-35, 1-38
A-1205-K-1779	1-18
A-1205-P-1914	1-49
A-1205-Q-1915	1-14
A-1205-A-1925	1-43
A-1205-D-1928	1-9, 1-11
A-1205-E-1929	1-6
A-1205-T-1996	2-3
A-1205-G-2425	1-27
A-1205-J-2428	1-41
A-1205-Q-2487	2-8, 2-9, 2-10, 2-11
1220-B-1094	1-14
1225-V-880	1-22
1227-F-162	2-2, 2-4
1227-R-330	2-8, 2-9, 2-10, 2-11, 2-12
1227-H-346	2-10
1227-D-446	2-5
1227-D-472	1-14
1227-U-515	2-5
1227-V-516	2-10
1227-W-517	2-8, 2-9, 2-10, 2-11, 2-12
1227-N-898	1-19, 1-29
1227-Q-901	1-27
1227-R-902	1-31, 1-35, 1-38
1227-Z-936	1-18, 1-24
1227-A-937	1-43
1227-C-939	1-3, 1-6
1227-D-940	1-14, 1-41, 1-43
1227-J-946	1-21, 1-43, 1-49
1227-Z-1040	2-6, 2-7, 2-10, 2-11
1227-E-1045	2-6, 2-7, 2-10, 2-11
1227-K-1051	1-9, 1-11
1227-B-1172	2-3
1228-K-37	1-32
1228-C-55	1-3, 1-7
1228-X-154	1-49
1228-J-192	1-43
1228-V-204	1-21
1228-A-261	1-14

Part Number	Page
1228-B-262	1-14
A-1228-N-326	1-42
1228-P-458	1-41
1228-F-552	1-10, 1-12, 1-19, 1-25, 1-28, 1-38
1228-H-580	1-7
1229-U-515Z	3-2, 3-3, 3-4
1229-V-516	3-6, 3-7
1229-X-518	3-8, 3-9, 3-10, 3-11, 3-12
1229-R-720	2-2, 2-3, 2-4
1229-S-721	2-2, 2-4
1229-R-798	1-19, 1-45
1229-Y-883	1-8
1229-D-992	1-16, 1-44, 1-49
1229-E-993	1-15, 1-44, 1-49
1229-U-1009	2-8, 2-9, 2-10, 2-11, 2-12
1229-C-1017	1-43, 1-44, 1-45
1229-G-1021	2-6, 2-7, 2-10, 2-11
1229-R-1032	1-10, 1-12, 1-20, 1-25, 1-28, 1-35, 1-39
1229-T-1034	1-10, 1-12, 1-20, 1-25, 1-28, 1-35, 1-38
1229-R-1058	2-10
1229-W-1063	1-8
1229-E-1071	1-49
1229-U-1113	1-49
1229-W-1167	1-7
1229-W-1245	1-19, 1-45
1229-A-1301	1-10, 1-12, 1-19, 1-24, 1-28, 1-38
1229-M-1313	1-4
1229-N-1314	1-4
1229-E-1331	1-3, 1-6
1229-P-1446	1-21
1229-S-1449	1-19
1229-C-1459	2-5
1229-N-1470	1-18
1229-U-1503	1-10, 1-12, 1-14, 1-15, 1-20, 1-24, 1-36, 1-39, 1-42, 1-43, 1-44, 1-50, 2-9, 2-10, 2-11, 2-12
1229-C-1511	1-8, 1-10, 1-12, 1-14, 1-19, 1-20, 1-24, 1-25, 1-28, 1-31, 1-35, 1-38, 1-39, 1-49, 2-4, 2-5, 2-6, 2-7, 2-8, 3-10, 3-11

Numerical Parts Index

Part Number	Page
1229-E-1513	1-4, 1-6, 1-9, 1-11, 1-21, 1-31, 1-41, 1-42, 1-45, 2-4, 2-5
1229-T-1554	1-42, 1-49
1229-V-1556	1-20, 1-24, 1-27, 1-35, 1-38
1229-W-1557	1-10, 1-12
1229-B-1562	1-6
1229-K-1597	1-18, 1-27, 1-43
1229-L-1598	1-43
1229-M-1599	1-19, 1-45
1229-N-1600	1-42
1229-R-1604	1-41
1229-S-1605	1-41, 1-43
1229-T-1606	1-42
1229-G-1619	1-22
1229-J-1622	1-22
1229-K-1623	1-14
1229-L-1624	1-14
1229-M-1625	1-14, 1-42
1229-B-1666	1-3, 1-19, 1-45, 1-47
1229-E-1669	1-14, 1-31, 1-32, 1-47
1229-N-1730	1-14, 1-19, 1-29
1229-T-1736	1-31, 1-38, 1-43, 1-49
1229-J-1882	1-3
1229-V-2024	1-15
1229-W-2025	1-16
1229-C-2057	1-43
1229-A-2445	2-11
1229-V-2570	1-41
1229-A-2653	1-9, 1-11, 1-18, 1-24, 1-27
1229-Y-2755	1-47
1229-Z-2756	1-47
1229-G-2763	1-31
1229-H-2764	1-32
1229-M-2769	1-41
1229-V-2856	1-47
1229-Q-2877	1-8, 1-22
1229-E-2891	1-16
1229-F-2918	1-35
1229-S-2983	2-3
1229-M-4069	1-32
1229-L-4354	1-41
1244-Y-701	1-21
1244-X-726	1-18
1244-G-787	1-43
1244-F-1592	1-35
1246-D-290	3-8, 3-9, 3-10, 3-11, 3-12
1246-M-455	1-28
1246-Z-1170	3-2, 3-3, 3-4
1246-A-1171	3-6, 3-7, 3-10, 3-11

Part Number	Page
1250-E-473	1-3, 1-10, 1-12, 1-42, 2-3, 2-4, 2-5, 2-6, 2-7, 2-8, 2-9, 2-10, 2-11, 2-12
A-1805-S-71	1-6
A-1805-B-80	1-24
A1-1805-S-149	1-49
A-1805-F-162	1-14, 1-41
A-1805-D-212	1-43
1820-R-44	1-3
1827-H-190	1-47
1829-A-859	1-18, 1-27
1850-T-150	1-20, 1-21
1898-E-57	1-31, 1-47
1898-Z-1066	1-14, 1-42
2203-H-450	1-9, 1-11
2203-J-452	1-9, 1-11
2203-K-453	1-9, 1-11
2203-A-469	1-14, 1-49
2203-B-470	1-14, 1-49
2203-L-1260	1-14, 1-49
2203-T-1502	1-3
2203-U-1503	1-3
2203-A-1509	1-3
2203-F-1566	1-3
2203-G-1567	1-3
2203-H-1568	1-3
2203-J-1570	1-3
2203-K-1571	1-3, 1-7
2203-L-1572	1-3
2203-M-1573	1-3
2203-N-1574	1-3
2203-P-1576	1-3
2203-Q-1577	1-3
2203-X-2728	1-7
2203-Y-2729	1-7
2203-Z-2730	1-7
2203-F-2788	1-43
2203-G-2789	1-43
2203-H-2790	1-43
2203-R-3008	1-22
2203-S-3009	1-22
2203-G-4089	1-41
2203-H-4090	1-41
2203-C-4709	1-16
2203-D-4710	1-16
2203-E-4711	1-16
2203-F-4712	1-16
2203-A-6319	1-28
2203-B-6320	1-28
2203-C-6321	1-28
2203-R-6518	1-31
2203-S-6519	1-31
2203-T-6520	1-31
2203-Q-6803	1-41
2203-R-6804	1-41
2203-S-6805	1-41

Part Number	Page
2203-S-6857	1-7
2203-T-6858	1-7
2203-U-6859	1-7
2203-V-6860	1-7
2203-W-6861	1-7
2203-X-6862	1-7
2203-Y-6863	1-7
2203-Z-6864	1-7
2203-A-6865	1-7
2203-B-6866	1-7
2203-C-6867	1-7
2203-G-6923	1-7
2203-H-6924	1-7
2203-J-6926	1-7
2203-K-6927	1-7
2203-L-6928	1-7
2203-M-6929	1-7
2203-N-6930	1-7
2203-P-6932	1-7
2203-R-6934	1-7
2203-J-7446	1-19, 1-24
2203-K-7447	1-19, 1-24
2203-L-7448	1-19, 1-24
2203-C-8115	1-35, 1-38
2203-D-8116	1-35, 1-38
2203-E-8117	1-35, 1-38
2203-T-8366	1-19, 1-24
A-2206-D-4	1-47
A-2206-E-5	1-47
2208-P-380	1-3
2208-U-411	3-2, 3-3, 3-4
2208-E-421	1-24
2208-H-424	1-14
2208-J-426	3-6
2208-M-429	1-19, 1-45
2208-X-440	3-8, 3-9, 3-10, 3-11, 3-12
2208-C-445	1-18, 1-27, 1-43
2208-D-446	1-20
2208-U-463	1-18
2208-H-476	3-7, 3-10, 3-11
2208-F-500	1-43
2208-G-501	1-42
2208-J-582	3-6
2214-X-50	1-44, 1-49
2214-E-57	1-3, 1-7
2214-K-89	1-14
2214-M-91	1-14
2214-V-178	1-10, 1-12
2214-Z-208	1-27, 1-35, 1-38
2214-G-215	1-20, 1-24
2233-U-99	1-15, 1-44, 1-49
2233-A-105	1-8, 1-22
2233-J-140	1-4
2233-U-151	1-10, 1-12, 1-20, 1-25, 1-28, 1-35, 1-39
2233-W-153	1-42

Numerical Parts Index

Part Number	Page
2233-C-159	1-15
2233-J-452	1-8
2233-Q-459	1-15
2233-Y-467	1-4
2233-J-1024	1-28, 1-39
2234-T-202	1-8
2234-Y-233	1-4
2234-K-271	1-44, 1-49
2234-X-310	1-20, 1-25
2234-M-325	1-22
2234-B-340	1-22
2234-F-344	1-15, 1-44, 1-49
2234-T-358	1-15
2234-E-473	1-15
2234-U-489	1-4
2234-M-507	1-8
2234-X-518	1-8
2234-F-604	1-42
2234-E-629	1-15
2234-X-700	1-20, 1-25
2234-F-734	1-10
2234-C-783	1-12, 1-28, 1-35, 1-39
2234-Q-797	1-8
2234-M-793	1-42
2234-N-872	1-8
2234-J-894	1-15
2234-R-954	1-4
2234-D-966	1-28, 1-39
2234-E-1019	1-32
2234-F-1046	1-28, 1-39
2244-E-83	1-31
2258-G-397	1-19
2258-L-402	1-45
2258-R-408	1-45
2258-U-411	1-19, 1-31
2258-A-521	1-31, 1-47
2258-P-692	1-16
A-2296-D-30	1-47
A-2296-E-31	1-47
2297-Q-563	1-3, 1-36
2297-N-768	1-19
A-2297-E-811	1-19
A1-2297-D-862	1-45
2297-S-1683	1-16
2297-T-1684	1-16
2297-W-1687	1-16
2297-A-2071	2-6
2297-V-2284	1-31
2297-E-2293	1-32
2297-X-2494	1-31
2297-D-3644	1-47
2297-C-3799	1-47
2297-N-3888	1-38
2297-T-4180	1-10, 1-12, 1-29, 1-35, 1-38
A1-2297-B-4240	1-31
2297-M-6981	2-12
2297-A-7021	1-18, 1-21, 1-31, 1-42, 1-47, 1-49, 2-2, 2-3, 2-4, 2-7, 2-8, 2-9, 2-10, 2-11, 2-12
2297-C-7049	1-4, 1-8, 1-10, 1-12, 1-15, 1-20, 1-21, 1-25, 1-28, 1-32, 1-35, 1-39, 1-42, 1-44, 1-50
A2-3200-C-393	1-24
F27-3200-C-393	1-23
F28-3200-C-393	1-23
F29-3200-C-393	1-23
F30-3200-C-393	1-23
H72-3200-C-393	1-23
H73-3200-C-393	1-23
H84-3200-C-393	1-23
H85-3200-C-393	1-23
A2-3200-P-484	1-3
A62-3200-P-484	1-2
A76-3200-P-484	1-2
A2-3200-E-603	1-14
A2-3200-G-605	1-14
A2-3200-T-800	1-20
K7-3200-T-800	1-18
K8-3200-T-800	1-18
K9-3200-T-800	1-18
K10-3200-T-800	1-18
A2-3200-U-801	1-20
C40-3200-U-801	1-18
C41-3200-U-801	1-18
C43-3200-U-801	1-18
C44-3200-U-801	1-18
A2-3200-R-1032	1-29
G71-3200-R-1032	1-27
G72-3200-R-1032	1-27
G73-3200-R-1032	1-27
G78-3200-R-1032	1-27
G85-3200-R-1032	1-27
G88-3200-R-1032	1-27
G90-3200-R-1032	1-27
G96-3200-R-1032	1-27
H8-3200-R-1032	1-27
H10-3200-R-1032	1-27
H22-3200-R-1032	1-27
A2-3200-Y-1039	1-35
A2-3200-L-1078	1-29
C16-3200-L-1078	1-27
C17-3200-L-1078	1-27
C20-3200-L-1078	1-27
C23-3200-L-1078	1-27
C28-3200-L-1078	1-27
C29-3200-L-1078	1-27
C31-3200-L-1078	1-27
A2-3200-N-1080	1-35
A2-3200-Y-1091	1-10, 1-12
A59-3200-Y-1091	1-9
A85-3200-Y-1091	1-9
A94-3200-Y-1091	1-9
B2-3200-Y-1091	1-11
A2-3200-A-1093	1-7
F23-3200-A-1093	1-6
G50-3200-A-1093	1-6
G76-3200-A-1093	1-6
G79-3200-A-1093	1-5
G80-3200-A-1093	1-6
G93-3200-A-1093	1-6
G96-3200-A-1093	1-5
G97-3200-A-1093	1-5
H33-3200-A-1093	1-5
H35-3200-A-1093	1-6
H41-3200-A-1093	1-6
A2-3200-R-1110	1-7
G31-3200-R-1110	1-6
G66-3200-R-1110	1-6
G86-3200-R-1110	1-5
H-3200-R-1110	1-6
H1-3200-R-1110	1-6
H20-3200-R-1110	1-5
H30-3200-R-1110	1-6
H42-3200-R-1110	1-5
H55-3200-R-1110	1-6
H72-3200-R-1110	1-6
H73-3200-R-1110	1-6
H84-3200-R-1110	1-6
A2-3200-S-1111	1-7
F26-3200-S-1111	1-6
F60-3200-S-1111	1-6
G6-3200-S-1111	1-6
G12-3200-S-1111	1-5
G39-3200-S-1111	1-5
G40-3200-S-1111	1-6
G64-3200-S-1111	1-6
G71-3200-S-1111	1-5
G80-3200-S-1111	1-5
A2-3200-U-1113	1-7
F34-3200-U-1113	1-6
F48-3200-U-1113	1-6
A10-3200-M-1235	1-46
A11-3200-M-1235	1-46
A12-3200-M-1235	1-46
A13-3200-M-1235	1-46
A2-3200-M-1235	1-47
A2-3200-N-1314	1-38
B11-3200-N-1314	1-37
B16-3200-N-1314	1-37
B22-3200-N-1314	1-37
B24-3200-N-1314	1-37
B51-3200-N-1314	1-37
B56-3200-N-1314	1-37
B62-3200-N-1314	1-37
A2-3200-T-1346	1-38
A56-3200-T-1346	1-37
A58-3200-T-1346	1-37
A61-3200-T-1346	1-37

Numerical Parts Index

Part Number	Page
A63-3200-T-1346	1-37
A2-3200-P-1420	1-42
A2-3200-C-1433	1-49
3202-X-3508	3-9
3202-H-2686	3-3
3202-M-2717	3-2
3202-D-2942	3-4, 3-5
3202-W-3039	3-12
3202-G-3075	3-4, 3-5
3202-R-3268	3-10
3202-A-3459	3-12
3202-P-3500	3-12
3202-B-3512	3-12
3202-B-3720	3-5
3202-W-3741	3-5
3202-C-4553	3-11
3202-E-4555	3-11
3202-B-5228	3-4, 3-5
3202-H-5520	3-3
3202-V-6054	3-9
3202-X-6056	3-9
3202-L-6356	3-11
3202-N-6358	3-11
3202-X-6472	3-10
3202-U-6729	3-12
3202-D-6712	3-6
3202-T-6728	3-12
3202-X-6732	3-6
3202-Z-6734	3-6
3202-D-6738	3-6
3202-J-6744	3-6
3202-M-6747	3-6
3202-Z-7384	3-12
3202-C-7387	3-12
3202-E-7415	3-3
3202-N-7450	3-3
3202-F-7572	3-7
3202-G-7625	3-12
3202-H-7626	3-12
3202-P-7816	3-4, 3-5
3202-T-7820	3-3
3202-K-7837	3-5
3202-N-7840	3-5
3202-P-7868	3-3
3202-Q-7869	3-3
3202-Y-7877	3-3
3202-S-7975	3-6
3202-T-8002	3-6
3202-N-8048	3-2
3202-P-8050	3-3
3202-Q-8051	3-4
3202-J-8070	3-6
3202-C-8141	3-9
3202-Q-8181	3-11
3202-R-8182	3-11
3202-Q-8389	3-4
3202-G-8405	3-6
3202-Z-8788	3-8

Part Number	Page
A-3226-Z-78	1-24
A-3226-P-94	1-3
A-3226-A-131	1-19
A-3226-X-180	1-43
A-3226-F-188	1-14
3226-M-351	1-41
A-3226-Q-537	1-18
A1-3226-Q-537	1-18
A-3226-R-564	1-28
A-3226-W-569	1-35
A-3226-M-585	1-31
A-3226-X-596	1-27
A-3226-E-655	1-7
A-3226-M-663	1-7
A-3226-P-692S	1-7
A-3226-W-699	1-43
3226-F-708	1-22
A-3226-F-708	1-22
A-3226-J-738	1-7
A-3226-K-739	1-7
A-3226-U-749	1-28
A-3226-Z-806	1-38
A-3226-L-818	1-3
A-3226-T-878	1-49
A-3226-L-896	1-49
A-3226-R-902	1-9, 1-11
A-3230-A-1	7-1
A-3230-B-2	7-1
A-3230-V-22	7-1
A-3230-W-23	7-1
A-3230-Y-25	7-1
A-3230-G-33	7-1
A-3230-L-38	7-1
A-3230-T-46	7-1
A-3230-U-47	7-1
C31-3235-Z-884	1-8
A1-3235-T-384	7-1
A3-3235-D-394	1-4
A21-3235-D-394	1-4
A46-3235-D-394	1-4
A3-3235-F-474	7-1
A12-3235-S-539	7-1
B3-3235-U-619	1-20, 1-24
B5-3235-U-619	1-20, 1-24
B11-3235-U-619	1-20, 1-24
A83-3235-V-620	1-20, 1-24
A84-3235-V-620	1-20, 1-24
A87-3235-V-620	1-20, 1-24
A17-3235-K-661	1-4
A-3235-K-661	1-4
A66-3235-Z-728	1-15
A77-3235-Z-728	1-15
A78-3235-Z-728	1-15
A80-3235-Z-728	1-15
B3-3235-Z-728	1-15
A17-3235-B-730	1-15
B4-3235-B-730	1-15
B23-3235-B-730	1-15

Part Number	Page
B24-3235-B-730	1-15
B26-3235-B-730	1-15
A-3235-W-751	1-42
A1-3235-Z-884	1-8
A8-3235-Z-884	1-8
A37-3235-Z-884	1-8
B33-3235-Z-884	1-8
C25-3235-Z-884	1-8
A1-3235-N-1106	1-44, 1-49
A4-3235-N-1106	1-44, 1-49
A32-3235-N-1106	1-44, 1-49
A1-3235-Q-1109	1-44, 1-49
A6-3235-Q-1109	1-44, 1-49
A39-3235-Q-1109	1-44, 1-49
A-3235-P-1134	1-8
A21-3235-P-1134	1-8
A34-3235-P-1134	1-8
A17-3235-L-1156	1-28, 1-35, 1-38
A26-3235-L-1156	1-28, 1-35, 1-38
A43-3235-L-1156	1-28, 1-38
A51-3235-L-1156	1-28, 1-38
A13-3235-C-1173	1-28, 1-35, 1-38
A19-3235-C-1173	1-28, 1-35, 1-38
A33-3235-C-1173	1-28, 1-38
A43-3235-C-1173	1-28, 1-38
A18-3235-D-1174	1-28, 1-35, 1-38
A28-3235-D-1174	1-28, 1-35, 1-38
A34-3235-D-1174	1-28, 1-38
A44-3235-D-1174	1-28, 1-38
A-3235-S-1371	1-10, 1-12
A1-3235-S-1371	1-10
A53-3235-S-1371	1-12
A-3235-Y-1481	1-4
A1-3235-Y-1481	1-4
A4-3235-Y-1481	1-4
A5-3235-Y-1481	7-1
A6-3235-Y-1481	1-4
A-3235-R-1500	1-15
A1-3235-R-1500	1-15
A-3235-S-1501	1-15
A1-3235-S-1501	1-15
A1-3235-T-1528	1-22
A2-3235-T-1528	1-22
A-3235-G-1541	1-15
A1-3235-G-1541	1-15
A-3235-H-1542	1-15
A1-3235-H-1542	1-15
A-3235-C-1589	1-4
A4-3235-C-1589	1-4
A7-3235-C-1589	1-4
A-3235-N-1678	1-44, 1-49
A1-3235-N-1678	1-44, 1-49
A3-3235-N-1678	1-44, 1-49
A-3235-Q-1681	1-44, 1-49
A1-3235-Q-1681	1-44, 1-49
A3-3235-Q-1681	1-44, 1-49
A-3235-F-1800	1-32
A2-3235-F-1800	1-42

Numerical Parts Index

Part Number	Page
A3-3235-F-1800	1-32
A1-3235-G-1801	1-42
A-3260-N-14	5-3
A1-3260-R-18	5-6, 5-8
A-3260-F-32	5-3
A-3260-M-39	5-3
A-3260-Z-52	5-3
A-3260-N-92	5-2
A-3260-G-111	5-5
A-3260-H-112	5-5
A-3260-K-115	5-5
A-3260-L-116	5-5
A-3260-M-117	5-5
A1-3260-M-117	5-5
A-3260-N-118	5-5
A-3260-P-120	5-5
A1-3260-P-120	5-5
A-3260-Q-121	5-5
A1-3260-Q-121	5-5
A-3260-R-122	5-5
A-3260-S-123	5-5
3260-T-124	5-5
3260-U-125	5-5
3260-V-126	5-5
3260-W-127	5-5
3260-X-128	5-5
3260-Y-129	5-5
3260-Z-130	5-5
3260-A-131	5-5
A-3260-B-132	5-5
A1-3260-Z-208	5-3
A1-3260-M-247	5-8
A-3260-N-248	5-3
A-3260-V-308	5-2
A-3260-D-1330	5-2
A-3261-C-289	1-19, 1-45
A1-3261-V-308	1-31
3262-H-112	1-43
A-3266-H-86	1-24
A-3266-Z-104	1-6
A-3266-V-126	1-3
A-3266-D-160	1-14
A-3266-P-510	1-31
3266-U-749	1-47
3266-H-970	1-31
3278-A-79	1-15, 1-44, 1-49
3278-H-86	1-10
3278-M-91	1-22
3278-Z-104	1-8
3278-C-107	1-4
3278-Y-129	1-42
3278-L-298	1-4
3278-S-305	1-12, 1-20, 1-25, 1-28, 1-35, 1-39
3278-H-372	1-32
3278-V-1088	1-42
3278-A-1093	1-32
A3-3280-E-1643	5-3, 5-7

Part Number	Page
A1-3280-W-1687	5-3
A2-3280-U-1815	5-7
A1-3280-A-1847	5-2
A-3280-B-1848	5-2
A-3280-F-1982	5-7, 5-8
A-3280-L-2040	5-2
A2-3280-L-2040	5-2
A-3280-P-2096	5-4
A-3280-B-2186	5-7, 5-8
A1-3280-W-2207	5-2
A2-3280-W-2207	5-2
A2-3280-X-2208	5-2
3280-M-2223	5-4
3280-P-2226	1-19
A1-3280-E-2241	5-2
A4-3280-E-2241	5-2
A1-3280-C-2265	5-2
3280-G-2269	5-4
3280-H-2270	5-4
A-3280-Q-2279	5-8
3280-G-2295	5-4
A-3280-H-2400	5-8
3280-Y-2417	5-4
A-3280-Z-2444	1-43
A-3280-D-2448	1-44
A1-3280-F-2450	5-8
3280-V-2518	1-21
A-3280-V-2518	1-21
3280-X-2520	1-19
3280-D-2526	1-19
A1-3280-D-2526	1-19
3280-U-2725	5-2
A-3280-T-2958	5-7
A1-3280-M-3029	5-3, 5-7
A1-3280-X-3274	5-3, 5-7
A2-3280-S-3581	5-3
3280-Y-3977	1-18
A-3280-Y-3977	1-18
A-3280-H-4038	5-4
A1-3280-Q-4047	5-4
A1-3280-S-4101	5-4
A-3280-K-4145	5-7
A1-3280-H-4246	5-3
A1-3280-J-4248	5-7
3280-V-5040	1-32
A1-3280-R-5452	5-3, 5-7
3280-G-5519	1-33
A1-3280-S-5609	1-41
A-3280-Z-5668	5-7
A1-3280-E-6583	5-3
3280-L-6720	1-43
A-3280-U-6729	5-6
A-3280-X-6732	5-6
A-3280-Z-6734	5-6
A-3280-A-6735	5-6
A-3280-B-6736	5-6
A1-3280-T-6754	5-6
A3-3280-T-6754	5-8

Part Number	Page
A3-3280-U-6755	5-6, 5-8
A2-3280-V-6756	5-6, 5-8
A1-3280-W-6757	5-6, 5-8
A1-3280-X-6758	5-6
A2-3280-X-6758	5-8
A1-3280-Z-6760	5-6, 5-8
A1-3280-B-6762	5-6
A2-3280-F-6766	5-6, 5-8
A1-3280-H-6768	5-8
3280-V-6964	1-32
A-3280-A-6969	5-3
A-3280-B-6970	5-3
A-3280-C-6971	5-3
A-3280-D-6972	5-3
A3-3280-T-7118	5-8
A-3280-W-7251	5-8
A1-3280-K-7603	1-47
A-3280-G-8067	5-2
A-3280-K-8071	5-2
A-3280-M-8073	5-2
3280-U-8081	1-31
3280-L-9528	1-27
3296-E-57	1-33
A-3296-T-150	1-33
A-3297-F-110	1-32
A1-3297-A-1015	1-32
A1-3297-Z-1014	1-32
A-3303-H-8	1-47
A-3880-K-921	1-18
3892-D-1798	1-43
A-3892-D-1824	1-18
A1-3892-D-1824	1-18
3892-F-1826	1-41
3892-P-2044	1-22
3892-S-3945	1-29
3892-Z-4368	1-31
3892-A-4369	1-31
A-3892-S-4517	1-19
3892-C-4735	1-19
3892-F-4738	1-32
3892-M-4927	1-32
A-3897-K-427	5-8
A-3897-R-512	5-7, 5-8
A-3897-L-532	5-8
A1-3897-L-1000	5-4
A1-3897-X-1896	5-2
382	2-3
387A	2-3
394A	1-3
394CS	2-3
395	1-3
395CS	2-3
453X	2-2, 2-4
462	2-2, 2-4
493	1-20, 1-24, 1-25, 2-6
495AX	2-6
496	1-20, 1-24, 1-25

Numerical Parts Index

Part Number	Page
497	1-20, 1-24
572	2-8, 2-9, 2-10, 2-11, 2-12
580	2-8, 2-9, 2-10, 2-11, 2-12
582	2-10
592A	1-14, 2-8, 2-9, 2-10, 2-11, 2-12
594A	2-8, 2-9, 2-11, 2-12
598	1-14
598A	2-9, 2-10
3920	2-2, 2-4, 2-5, 2-6
3982	2-5
3984	2-2, 2-4, 2-6
3994	1-8
29630	1-22
29675	1-22
31520	1-18
31597	1-18
33287	2-5
33462	2-5
39520	2-7, 2-10, 2-11
39590	2-7, 2-10, 2-11
42620	2-10
42687	2-10
44143	1-3, 1-6
44348	1-3, 1-6
47620	2-7, 2-10, 2-11
47686	2-7, 2-10, 2-11
47820	1-44, 1-49
47890	1-44, 1-49
52387	1-14
52618	1-14
55200C	1-9, 1-11
55437	1-9, 1-11
65237	1-35, 1-43
65500	1-35, 1-43
72188C	1-24
72200C	1-19, 1-24
72212C	1-28, 1-38
72225C	1-35
72487	1-19, 1-24, 1-28, 1-35, 1-38
141DYS22A	5-2
141DYS24-2A	5-2
141NYS22A1	5-2
141NYS22A4	5-2
141NYS24A	5-2
141NYS28A	5-3
141TYS22A	5-2
148DYS22A	5-2
148NYS22-1A1	5-2
148NYS22-1A2	5-2
148NYS24-11	5-2
148NYS28-9A	5-3
155DYS24-2A	5-2
155DYS28-1A	5-3

Part Number	Page
155N-4-1981	5-4
155NYS32-7A	5-8
16N-4-1631	5-4
16N-4-1931	5-4
16N-4-3621	5-4
16N-4-3861	5-4
16N-4-5281X	5-7, 5-8
16N-4-6251	5-5
16N-4-6261	5-5
16N-4-6281X	5-5
16N-4-6291X	5-5
16N-4-6891X	5-3, 5-7
16N-4-6951X	5-6, 5-8
16N-4-6961X	5-6, 5-8
176N-4-541X	5-5
176N-4-731X	5-3
176NYS32-4A1	5-8
17N-4-2381	5-4
17N-4-4091	5-4
17N-4-4181X	5-8
17N-4-4291X	5-4
17N-4-4361X	5-7
17N-4-4361X	5-8
17N-4-4411X	5-3, 5-7
17N-4-4481X	5-7
17N-4-5461X	5-6
17N-4-6321	5-5
17N-4-6331	5-5
17N-4-6391X	5-5
17N-4-6411X	5-5
17N-4-6871X	5-8
17N-4-6891X	5-3
17N-4-6941X	5-8
17N-4-6951X	5-8
17NYS32-100A	5-5
17NYS32-40A1	5-6
17NYS32-41A1	5-6
17NYS32-99A	5-5
18N-4-2551X	5-3, 5-7
18N-4-2711	5-6
18N-4-3381X	5-5
18N-4-3571X	5-8
18NYS31A	5-7
62NYS22-9A	5-2
62NYS24-17A1	5-2
62NYS24-33A	5-2
62NYS28-123	5-4
62NYS28-154	5-3
62NYS28-155A	5-3
62NYS28-160A	5-3
72NYS24	5-2
72NYS28-162A	5-3
72NYS28-166A	5-3
72NYS28-176	5-5
72NYS28-177	5-5
72NYS28-7	5-4
72NYS31-3A	5-8
72NYS31-49A	5-7

Part Number	Page
72NYS31-4A	5-7, 5-8
72NYS31-8A	5-7
72NYS32-219A	5-6, 5-8
72NYS32-220A	5-6
72NYS32-221A	5-6, 5-8
72NYS32-222A1	5-6, 5-8
72NYS32-244A	5-5
72NYS32-245A	5-5
72NYS36-40A1	5-3
72NYS36-54A2	5-3
82NYS28-36	5-5
82NYS31-5A	5-8
82NYS31-6A	5-8
82NYS32-70A	5-8
82NYS32-70A1	5-6
82NYS32-74A	5-5
82NYS32-74A1	5-5
82NYS36-26A1	5-3, 5-7
82NYS36-30A	5-7
82NYS38-14A	5-6
82NYS38-15A	5-6
85WBYS31-4A	5-8
92NYS28-5	5-5
92NYS32-25A	5-5
92NYS32-26A	5-5
92NYS38-39A	5-6
A-35426-1	4-2
A-35428-2	4-2
A-35430-2	4-2
A-35510-5	4-2
A-35510-7	4-2
A-35512-5	4-2
A-35512-6	4-2
A-35514-6	4-2
A-35514-7	4-2
A-35536-9	4-3
A-35538-10	4-3
A-35540-8	4-3
A-35634-6	4-2
A-35634-8	4-2
A-35636-6	4-3
A-35710-3	4-3
A-35774-12	4-3, 4-4
A-35776-9	4-3, 4-4
A-35780-4	4-2
A-35780-6	4-2
A-35798-3	4-2
A-35800-14	4-6
A-35800-17	4-5
A-35800-18	4-5
A-35802-15	4-6
A-35802-17	4-5
A-35802-18	4-5
A-35804-19	4-6
A-35804-22	4-5
A-35804-23	4-5
A-35806-19	4-6
A-35806-21	4-5

Numerical Parts Index

Part Number	Page
A-35806-22	4-5
A-35808-19	4-6
A-35808-22	4-5
A-35808-23	4-5
A-35810-17	4-6
A-35810-19	4-5
A-35810-20	4-5
A-35812-18	4-6
A-35812-20	4-5
A-35812-21	4-5
A-35814-14	4-6
A-35814-16	4-5
A-35814-17	4-5
A-35816-17	4-6
A-35816-19	4-5
A-35816-20	4-5
A-35818-20	4-6
A-35818-23	4-5
A-35818-24	4-5
A-35954	4-5
A-35968	4-5
A-35970	4-5
A-35972	4-5
A-35978	4-5
A-36028-18	4-6
A-36028-20	4-5
A-36028-21	4-5
A-36036	4-5
A-36044-3	4-3, 4-4
A-36054	4-5
A-36100	4-5
A-36102	4-5
A-36118-2	4-2
A-36134	4-5
A-36162-2	4-3
A-36352-3	4-2
A-36446-13	4-6
A-36446-15	4-5
A-36446-16	4-5
A-36722-10	4-6
A-36722-12	4-5
A-36722-13	4-5
A-36766	4-5
A-36768-7	4-3, 4-4
A-37162-2	4-2
A-37258-2	4-7
A-37278-2	4-7
A-37306-2	4-7
A-37308-1	4-7
A-37326-1	4-7
A-37374-1	4-7
A-37376-1	4-7
A-37382-1	4-7
A-37392-1	4-7
A-37394-1	4-7
A-37396-2	4-7
A-37398-1	4-7
A-37404-1	4-7

Part Number	Page
A-37428-2	4-3
A-37494-2	4-7
A-37530-2	4-7
A-37532-3	4-7
A-37534-3	4-7
A-37536-3	4-7
A-37540-2	4-7
A-37542-3	4-7
A-37544-3	4-7
A-37562-1	4-7
A-37564-1	4-7
A-37566-1	4-7
A-37588-10	4-6
A-37588-12	4-5
A-37588-13	4-5
A-37594-3	4-7
A-37596-2	4-7
A-37598-3	4-7
A-37708-2	4-2
A-37708-3	4-2
A-37710-1	4-2
A-37710-3	4-2
A-37944-4	4-3, 4-4
A-37960-2	4-3, 4-4
A-38000-3	4-7
A-38002-1	4-7
A-38004	4-5
A-38006-10	4-5
A-38006-3	4-6
A-38006-9	4-5
A-38048-2	4-3, 4-4
A-38124-1	4-3
A-38126-1	4-3
A-38128-1	4-3
A-38240-1	4-7
A-38242-1	4-7
A-38246-1	4-7
A-38278-1	4-3
A-38280-2	4-3
A-38496	4-5
A-38512-1	4-7
A-38520-1	4-7
A-38524-1	4-7
A-38526-1	4-7
A-38712-1	4-2
A-38714-1	4-2
A-38716-1	4-2
A-38718-1	4-2
A-38720-1	4-2
A-38722-1	4-2
A-38724	4-5
A-38734-1	4-2
A-38736-1	4-2
A-38756-1	4-3, 4-4
A-38758-1	4-7
A-38790-1	4-3, 4-4
A-38816-1	4-3, 4-4
A-38818-1	4-3, 4-4

Part Number	Page
A-38826-1	4-7
A-38834-1	4-7
A-39166-1	4-7
A-39206-1	4-3, 4-4
A-40036-1	4-8
A-40046-1	4-8
A-40074-1	4-9
A-40088-1	4-9
A-40160-1	4-8
A-40162-1	4-8
A-40162-3	4-8
A-40164-1	4-8
A-40164-3	4-8
A-40170-1	4-8
A-40172-1	4-8
A-40172-3	4-8
A-40176-1	4-8
A-40178-1	4-8
A-40178-3	4-8
A-40180-1	4-8
A-40182-1	4-8
A-40182-9	4-8
A-40306-1	4-8
A-40306-3	4-8
A-40502-1	4-8
A-40502-3	4-8
A-40504-1	4-9
A-40534-1	4-9
A-40536-1	4-9
A-40536-3	4-9
A-40538-1	4-2
A-40538-3	4-2
A-40542-1	4-9
A-40542-3	4-9
A-40544-1	4-9
A-40544-3	4-9
A-40546-1	4-9
A-40546-3	4-9
A-40674-1	4-9
A-40674-6	4-9
A-40676-1	4-9
A-40676-3	4-9
A-40678-1	4-9
A-40678-3	4-9
A-40680-1	4-9
A-40680-6	4-9
A-40682-1	4-9
A-40682-5	4-9
A-40754-1	4-2
A-40754-3	4-2
A-40944-1	4-2
A-41814-1	4-7
A-41816-1	4-7
A-41818-1	4-7
A-41820-1	4-7
DEFR40-4	1-9, 1-11
DEFR50-2	1-14
DEFR50-4	1-31

Numerical Parts Index

Part Number	Page
DEFR50-7	1-35
H-715311	1-14, 1-44, 1-49
H-715334	1-14, 1-49
H-715343	1-14, 1-44, 1-49
HM-803110	1-6, 1-7
HM-803146	1-7
HM-803149	1-6, 1-7
HM-804810	1-9, 1-11
HM-804846	1-9, 1-11
JH-211710	1-41
JH-211749	1-41
JLM-104910	1-43
JLM-710910	1-32
JLM-710949C	1-32
JLM-714110	1-10, 1-12, 1-42
JLM-714149	1-10, 1-12, 1-42
JM-511910	1-8, 1-31
JM-511946	1-31
JM-716610	1-27, 1-35, 1-38
JM-716649	1-27, 1-35, 1-38
KIT 204	6-1
KIT 237	6-1
KIT 239	6-1
KIT 315	6-1
KIT 316	6-1
KIT 317	6-1
KIT 318	6-1
KIT 322	6-2
KIT 325	6-2
KIT 326	6-2
KIT 327	6-2
KIT 332	6-2
KIT 333	6-2
KIT 337	6-3
KIT 346	6-3
KIT 347	6-3
KIT 348	6-3
KIT 349	6-3
KIT 363	6-3
KIT 381	6-3
KIT 382	6-4
KIT 383	6-4
KIT 389	6-4
KIT 392	6-4
KIT 394	6-4
KIT 396	6-4
KIT 397	6-4
KIT 462	6-5
KIT 463	6-5
KIT 472	6-5
KIT 473	6-5
KIT 486	6-6
KIT 487	6-6
KIT 489	6-6
KIT 519	6-6
KIT 521	6-7
KIT 530	6-7
KIT 545	6-7

Part Number	Page
KIT 546	6-7
KIT 562	6-8
KIT 570	6-8
KIT 576	6-8
KIT 577	6-8
KIT 578	6-8
KIT 591	6-8
KIT 592	6-9
KIT 599	6-9
KIT 939	6-9
KIT 946	6-9
KIT 947	6-9
KIT 948	6-9
KIT 984	6-10
KIT 1379	6-10
KIT 1399	6-10
KIT 1500	6-10
KIT 1514	6-10
KIT 1555	6-11
KIT 1556	6-11
KIT 1568	6-11
KIT 1569	6-11
KIT 1570	6-12
KIT 1588	6-12
KIT 1589	6-12
KIT 1590	6-13
KIT 1609	6-13
KIT 1610	6-13
KIT 1612	6-13
KIT 2117	6-13
KIT 2119	6-13
KIT 2201	6-13
KIT 2229	6-13
KIT 2247	6-14
KIT 2260	6-14
KIT 2261	6-14
KIT 2266	6-14
KIT 2268	6-14
KIT 2269	6-14
KIT 2274	6-14
KIT 2285	6-15
KIT 2294	6-15
KIT 2306	6-15
KIT 2427	6-15
KIT 2467	6-15
KIT 2498	6-15
KIT 4005	6-16
KIT 4010	6-16
KIT 4015	6-16
KIT 4035	6-16
KIT 4040	6-17
KIT 4045	6-17
KIT 4055	6-17
KIT 4060	6-17
KIT 4065	6-17
KIT 4075	6-18
KIT 4080	6-18
KIT 4100	6-18

Part Number	Page
KIT 4110	6-19
KIT 4150	6-19
KIT 4330	6-19
KIT LD 100 1032A	6-20
KIT LHF 800B	6-20
KIT LR100 1314	6-21
KIT QAR 1039A	6-21
KIT QD 100 1032B	6-22
KIT QD 100 1032C	6-23
KIT QDF 800A	6-24
KIT QHP 1032	6-25
KIT QHR 393	6-25
KIT QR100 1314	6-26
KIT QRD 100 1032	6-27
KIT QRR100 1314	6-28
KIT R170	6-28
KIT R170A	6-29
KIT SHD 1162A	6-30
KIT SHD 1162B	6-31
KIT SHD 1162C	6-32
KIT SHF 1162	6-35
KIT SHF 585	6-33
KIT SHF 585D	6-34
KIT SHR 606	6-35
KIT SHR 606A	6-36
MPS 1842	6-36
MPS 2259	6-36
MPS 2294	6-37
MPS 2388	6-37
MPS 2401	6-37
MPS 2438	6-37
MPS 2637	6-37
MPS 2997	6-37
MPS 3344	6-38
MPS 3345	6-38
LM-104949	1-43
LM-603011	1-18, 1-27
LM-603049	1-18, 1-27
M-903310	1-3
M-903345	1-3
N-16-1	1-45
N-17	3-2, 3-3, 3-4
N-18-1	1-44
N-110-1	2-9, 2-12, 3-8, 3-9, 3-10, 3-11, 3-12
NL-16-1	1-19, 1-45
NL-18-1	1-8, 3-6, 3-7, 3-10, 3-11
NL-25-1	1-32
NL-27-1	1-42
NL-110-1	1-10, 1-12, 1-14, 1-20, 1-24, 1-28, 1-36, 1-39, 1-44, 1-50, 2-10, 2-11
NUJA8-20-6	1-33
P-26	1-31

Numerical Parts Index

Part Number	Page
P-28S	2-6, 2-7, 2-8, 2-9, 2-10, 2-11, 2-12
P-212	1-3, 1-7, 1-14, 1-20, 1-21, 1-24, 1-28, 1-35, 1-38, 1-42, 1-49, 2-2, 2-12
PW-214	1-31
R945007	1-41
R945008	1-31
R945009	1-35, 1-38
RV-7712	1-4
RV-7812	1-4
RV-71013	1-10, 1-12, 1-20, 1-24, 1-28, 1-36, 1-39
RV-71016	1-44, 1-50
S-256-2	1-3, 1-14, 1-31
S-266-1	1-43
S-267-2	1-22
S-268-2	1-18, 19, 1-43, 1-44, 1-45, 1-47
S-269-2	1-3
S-1811-1	1-44
S-1812-2	1-33
S-2510-2	1-32, 1-47
S-2524-2	1-32
S-2610-2	1-3
S-2616-2	1-3
S-2710-2	2-2, 2-3
S-2711-2	1-21, 1-31
S-2712-2	1-6, 1-9, 1-11, 1-41, 2-2, 2-3, 2-4, 2-5
S-2718-2	2-4, 2-5
S-2721-2	1-4
S-2722A-1	1-4, 1-42
S-2726-2	1-42
S-2811-2	1-19, 2-6, 2-7, 2-8
S-2812-2	1-19, 1-28, 1-31, 1-35, 1-38, 2-4, 2-5
S-2813-2	1-24, 1-49
S-2816-2	1-14, 2-6, 2-8
S-2817-2	2-7
S-2824A-2	1-8, 1-21
S-2826P-1	1-10, 1-12, 1-20, 1-25, 1-28, 1-35, 1-39
S-2934-2	1-3
S-11444-2	1-14
S-21014-1	2-12
S-21016-2	2-9, 2-11
S-21020A-2	1-15, 1-44, 1-50
S-21022-2	1-42, 2-12
S-21024-1	2-9, 2-12
S-21028A-2	1-15, 1-44, 1-50

Part Number	Page
S-21036-2	1-10, 1-12
S-21238-2	1-20, 1-24, 1-27, 1-35, 1-38
S-21444-2	1-42, 1-49
SN-613-1	1-45
SN-1020-1	2-12
SN-1021-1	2-10, 2-11
SN-1023-1	2-10
SN-1028-1	2-12
SP-1035	1-19
WA-16	1-3, 1-19

Part Number	Page

ARVINMERITOR AFTERMARKET PARTS WARRANTY

We warrant all new parts for one year from date of shipment to the buyer against defective material or workmanship (but not against damage caused by accident, abuse or improper installation, maintenance or repair) when such parts are used on vehicles the specifications of which have been approved by our Engineering Department.

As the exclusive remedy under this warranty, we will, at our option, repair or replace such parts free of charge, or take back the nonconforming parts and refund the monies paid by buyer for such parts, if found on examination by us to be nonconforming and if any necessary return charges are prepaid.

If it is necessary to return any parts under this warranty, buyer agrees not to make any deduction on account thereof from remittances on current accounts while claims are in the process of disposition. Any expense incurred without our consent for repairs or replacement will not be allowed.

THIS WARRANTY IS EXPRESSLY IN LIEU OF ALL OTHER WARRANTIES OR CONDITIONS, EXPRESS, IMPLIED OR STATUTORY, INCLUDING ANY IMPLIED WARRANTY OF MERCHANTABILITY OR FITNESS FOR PARTICULAR PURPOSE. IN NO EVENT SHALL SELLER BE LIABLE FOR INCIDENTAL OR CONSEQUENTIAL DAMAGES OF ANY NATURE.

Only genuine ArvinMeritor replacement parts are covered by this aftermarket parts warranty.

Information contained in this publication was in effect at the time the publication was approved for printing and is subject to change without notice or liability. ArvinMeritor reserves the right to revise the information presented or discontinue the production of parts at any time.

ArvinMeritor™

Commercial Vehicle Aftermarket

Meritor Heavy Vehicle Systems, LLC
7975 Dixie Highway
Florence, KY 41042 USA
888-725-9355
www.arvinmeritor.com

© 2006
ArvinMeritor, Inc.

Printed in U.S.A.

Revised 2/2006
PB-9424